PROCEEDINGS of the
23rd International Congress on Acoustics

9 to 13 September 2019 in Aachen, Germany

The church building secularization through its sound in a contemporary case study

Maria CAIROLI[1]; Livio MAZZARELLA[2];

[1] Politecnico di Milano, Italy

[2] Politecnico di Milano, Italy

ABSTRACT

This work describes a novel approach in designing new churches, explaining the case study Sant'Ambrogio Church in Trezzano, Milan (IT) in detail. The article presents a room acoustics analysis of the church through implementation of computer simulation techniques, emphasizing the continuity and breaking elements with historical churches.

In the past the sacred sense in a church was greatly reinforced by the surrounding atmosphere of very reverberant spaces with possible echoes that infatuated the perception of God and his presence. On the contrary, nowadays concentration and intimacy are preferred, the reverberation is reduced, the speech intelligibility of the homily to understand the message of God is increased, while music or songs steel accompany the choral word of the church goers.

The proposed acoustic design includes a new approach with an acoustic response suitable for both speech and music, considering also the recent room acoustics studies in other typologies of building such as congress centers and multipurpose auditoria.

Keywords: room acoustics; intelligibility; computer simulation

1. INTRODUCTION

At the time of prophets and epic, the Hearing was a more vital sense than the Sight. The God's Word and all the other fundamental communications were not read but heard, and also in the clandestine Christian church of the 1st and 2nd centuries was the listening of rites to have a decisive influence on the liturgy's development. Only during the Romanesque and the Renaissance period the Hearing loses its main role although it continued to play an important role (1). One of the most obvious consequence is the change in the divinity conception. With the Renaissance, God becomes definitively represented by an image, before it was conceived as a sound, or as a vibration (2).

An analysis of the dimensions of the churches according to the architectural style shows a singular transformation of the sound field, up today.

In the Romanesque period, a close relationship between architecture, music and liturgy, focuses on the multisensory experience of architecture, complementing the visual space with the sound field (3). The literature includes researches with different approaches to this relationship, either through the analysis of the relationship between architecture and acoustics in religious buildings in their current condition (4-5) or from the perspective of the acoustic evolution connecting liturgy, music and architecture (6-8), or studying the interconnections in the origins of Christianity.

From the Hebrew tradition, the early Christian church inherited the taste for the intonation of fragments of sacred texts to give an emphatic value to the rite and the attainment of transcendent states and only in the XX century, with the introduction of the national languages in the catholic churches, the Second Vatican Council sanctions the importance of the active participation of the church goers in the liturgy, the understanding of the priest's word, and the formative value of the lectures. Thus a new acoustic requirement is created that is in contrast with the acoustic answer of a historical church.

A historical church, in fact, is characterized by a long reverberation time, able to encourage choral singing and to create that emotional involvement that, for a long time, was the only possible form of

[1] maria.cairoli@polimi.it
[2] livio.mazzarella@polimi.it

participation for most of the people who did not know Latin.

The necessity to make the entire liturgical celebration comprehensible has then led to a global rethinking of the acoustics of the churches while maintaining the need not to penalize the more "emotional" aspects of participation. This study aims to underline the main acoustic requirements for a new church building, explaining the new project of Sant'Ambrogio Church in detail, finding guide lines that can be followed in every new church acoustic design.

2. SHORT HISTORICAL EXCURSUS

2.1 Acoustics in the churches of the past

With the Pope Gregory the Great (590e604) (1), among the elements that connect acoustics with architecture in a church, the choir and the organ became the most important ones. It was the organ, in fact, to be erected as the liturgical instrument par excellence, thanks to its special characteristics. The organ, with the imposing presence of the pipes and its versatility for ornamentation, was able to adopt a preeminent place in the church, since it was considered as an element of prestige and constituted part of the ornamentation and architecture.

About the choir, already in many medieval monastic churches, it was located in the main nave. In the latter monumental spaces, the choir ends up being the pretext for the furnishing of the interior, acquiring a sculptural character and obviating the functional and acoustic requirements. Gothic architecture encloses the choir with highly decorated walls and with chairs that used to be double in height: high choir, for the canons and low choir, for the clerics.

In this period Church buildings were characterized by a progressive growth of their volume, to symbolize the political power of the civil or religious communities that had erected them.

In the Renaissance architecture, and later Baroque, however, the choir was eliminated from the central nave, since it was considered as an obstacle by the architects of the time in the perception of the unique space and for the perspective. It should also be noted that in the years preceding the Lutheran Reformation, only the clergy participated actively in the liturgical celebration, while the church goers, already unable to understand Latin, were further penalized.

The Counter-Reformation sanctioned by the Council of Trent constituted an important turning point after which the Church of Rome opted for a form of conviction based on the splendor of the "amaze" the church goers. In practical terms, after the Counter-Reformation the churches became smaller and richly decorated, with an improvement in the acoustic conditions (1).

In the reality it is steel difficult to find references to the acoustic diagnosis of these spaces in architectural and musical historiography, despite the large number of documentary sources that deal with the relationship between ecclesial architecture and music (9). In order to understand the acoustic characteristics of the Christian church in the 21st century, some main information will be given in the next paragraph.

2.2 Acoustics in contemporary churches

In contemporary churches, greater attention should be given to architectural aspects that influence the room acoustic answer, in particular the volume dimension, the plan shape and the used materials (10).

The reverberation time should not be too long, in order to guarantee a good speech comprehension related to the values of the acoustic parameters Definition (D_{50}) and Intelligibility (STI), but also not too short to take into account the musical conditions expected in the frequent celebration of solemn masses, controlling also the acoustic parameter related to the Clarity (C_{80}) of music.

In some cases contemporary churches have to host also the organ accompanied by choral singing (Gregorian). As a result, several activities with different acoustic requirements, can coexist also during the same ceremony. Therefore, the requirements needed to achieve suitable acoustic conditions may vary and a new approach with a response suitable for both speech and music is needed, independently from the church goers presence that can vary from time to time.

On the reality, however, there is often a substantial absence of acoustically absorbing materials inside, like heavy carpets, upholstered benches, curtains and decorations with acoustic diffusive and diffractive properties, with consequent criticalities due to the increase in reverberation time. This is the reason why in most of the cases a significant variation of the acoustic conditions is demanded to the mere presence of the church goers (with sound-absorption properties). Churches that have very poor acoustic characteristics in conditions of modest occupation can reach acceptable levels when they are

completely full of people. The dependence of the acoustic response on the presence of people, however, represents a problem from the acoustic point of view since it introduces a variable and unpredictable character.

3. THE SANT'AMBROGIO VESCOVO CHURCH

The project of the new Church of Sant'Ambrogio in Trezzano started on 2011 as a part of a more general plan of redevelopment and modernization of the urban context of Trezzano sul Naviglio.

A long churchyard, a place to welcome the church goers and where to stay with pleasure after the liturgy, acts as a counterpoint to the pure liturgical area.

In spite of the formal complexity of many modern religious buildings, the Church of Sant'Ambrogio, rectangular in plan with only a central nave, recovers some traditional styles, as the simplest Romanesque Churches, reinterpreting them.

The verticality of the building (21 m high), with a volume of 8100 m^3 (width equal to 20 m and length equal to 33 m), seems to guide the eye upwards, as it happens in medieval Gothic churches, constituting a continuous reference to the Divine. The cross of Christ in the middle nave is an element that also inspires the architectural choices, both in the building plan and in the lateral views so the external side facing Milan allows to see clearly the profile of the cross on the roof top, while inside of the church the cross is inverted and delimits the spaces, creating a clear perception of the volumes in which the light radiates strongly.

The interior of the structure shows a remarkable awareness in the realization of liturgical places. The baptismal font, made of shiny marble, is illuminated by a skylight that once again attracts the view upwards. White marble is the formal language of the altar, the point where the focal lines of the entire room converge, slightly raised above the level of the church goers. The ambo, raised in the most classic of architectural traditions, is integrated into the white of the room thanks to the marble that covers it.

The light is the clearest leitmotif: it is as natural as possible, thanks to the articulated system of skylights, windows and light points that can radiate all the space. A careful game of alterations in light intensity allows to create more intimacy in the confessional area or to emphasize the altar, the ambo and the baptistery (Figure 1- 4).

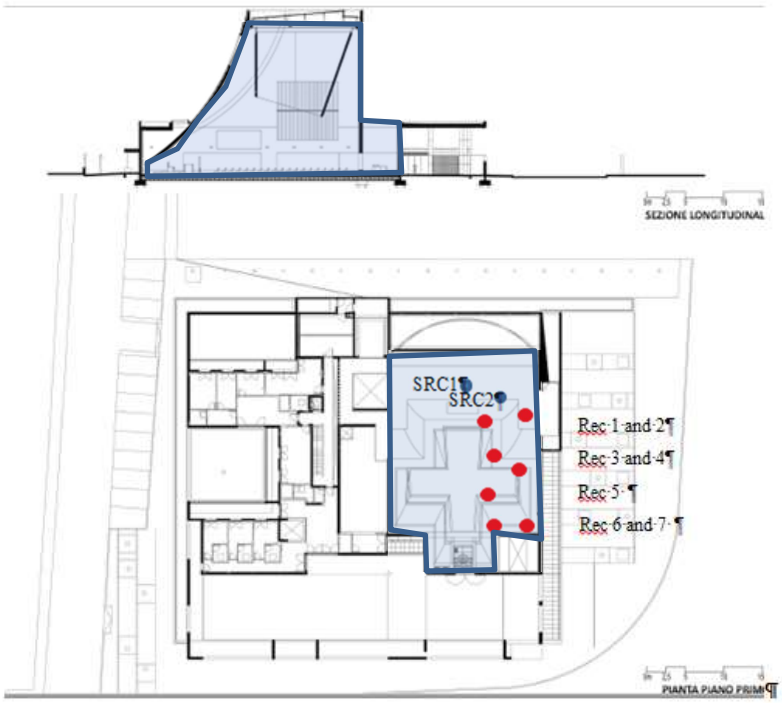

Figure 1 and 2. The church longitudinal section and plan

(source position are colored blue, receivers are colored red)

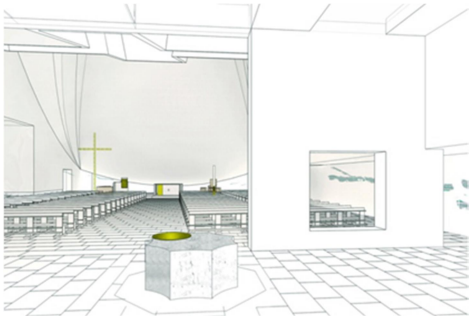

Figure 3 and 4. Church external rendering and internal rendering from the rear wall

4. COMPUTER SIMULATION MODELING

4.1 Acoustic simulations

SketchUp 3D modelling software was used to create a virtual acoustic model of the Church of Trezzano, based on plans and sections which describe the geometry of its interior space.

The model was exported to CATT Acoustic (11) (version 8) to carry out the acoustic assessment, a calculation engine known to be effective in the prediction of the acoustic parameters (12). The length of the room impulse response was set manually, because it was not possible to use measured data to calibrate the model being the church not yet built at that time.

A complete calculation of all the acoustic indicators was carried out to verify the consistency of the obtained results. The absorption coefficients of all materials foreseen by the design were accurately defined. Most of them have been measured in reverberant chamber following the UNI EN ISO 354. The main ones are reported in detail in table 1. The acoustic evaluation method and the predicted acoustic parameters are those presented in ISO 3382-1. Based on this approach, most acoustic parameters were considered in seven receivers positions (figure 2) and their average values calculated to describe the acoustic quality of the space (13). The analysis focuses primarily on the musical quality of the church and the speech intelligibility, thus the parameters considered in the objective analysis are as follows:

- Definition (D_{50}), Sound Transmission Index (STI), Clarity (C_{80}), and the Centre Time (T_s), associated with the balance between early and late energy reaching the receiver.
- the reverberation time (T_{30}) and Early Decay Time (EDT).

Table 1. main absorption coefficients.

Surfaces	Materials	Absorption Coefficient					
		125	250	500	1000	2000	4000
Internal surfaces of the crucifix Perimeter ceiling around the skylights	polyester fiberboard coated with sound-absorption plaster, density 60 kg/m^3, sp. 50 mm	0.12	0.25	0.68	0.94	0.94	0.94
Higher part of the lateral walls	Polyester fiberboard, density 60 kg/m^3, sp. 70 mm	0.12	0.25	0.68	0.94	0.94	0.94
Lower part of the lateral walls and Wall behind the altar	light absorbing plaster	0.10	0.15	0.25	0.35	0.35	0.42
Audience	moderately upholstered chairs,	0.51	0.64	0.75	0.80	0.82	0.83
Floor	marble	0.02	0.02	0.03	0.03	0.04	0.04
Entrance wall	polyester fiberboard coated with sound-absorption plaster, density 60 kg/m^3, sp. 50 mm	0.12	0.25	0.68	0.94	0.94	0.94
windows	glass	0.12	0.10	0.07	0.06	0.06	0.05

4.2 Computer simulation results

The presented output maps (figure 5-10) at central frequencies 500 Hz, and 1 kHz, derive from the preprocessing analysis concerning the main acoustic parameters (just the much more significant parameters related to source SRC1 are plotted in this paper), considering two different source positions SRC1 and SRC2. SRC1 is situated near the central axis of the church, near the altar, the SRC2 is put near the lateral walls in the choir position (figure 2).

For both source positions the acoustic parameter results are very similar and there are no significant changes between them, according to the JND (Just Noticiable Difference) evaluation (14).

The predicted parameter Definition D_{50} is over 50%, as requested for a good intelligibility, considering that D_{50} > 45% guarantees more than 90% of the syllables comprehensible (15) (as requested in congress centers), according to the standard ISO 33382-1, and the STI predicted values are between 60% and 80% in every order of seats, a values' range classified as a good result according to the IEC 60268-16 scale quality.

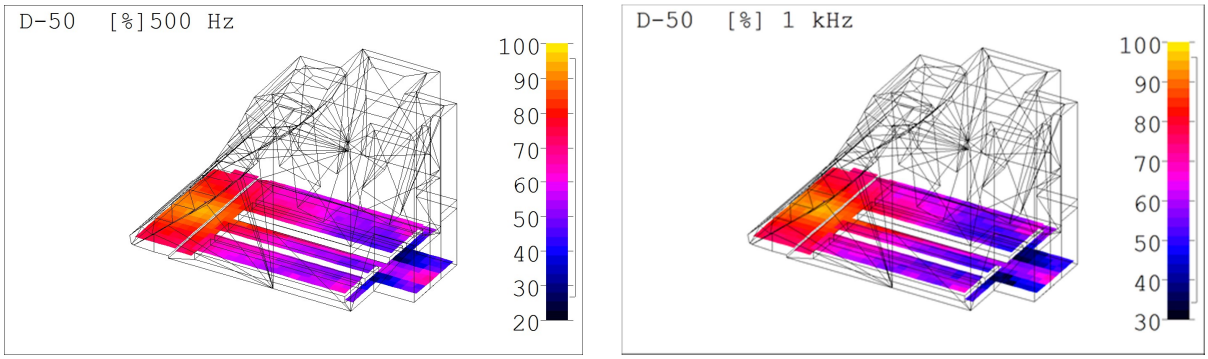

Figure 5 and 6: 3D model SRC_1 - Definition (D_{50}) at 500 Hz and 1kHz

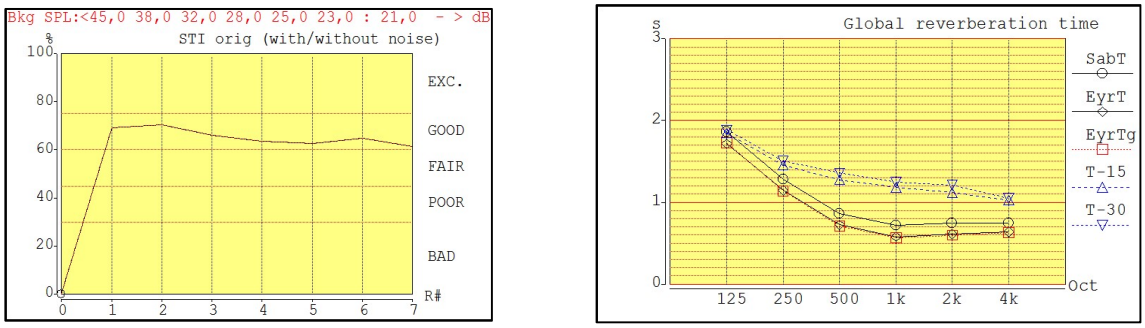

Figure 7 and 8: STI Values and Trend and RT Sabine (SabT), RT Earying (EyrT), T_{30} and T_{15}

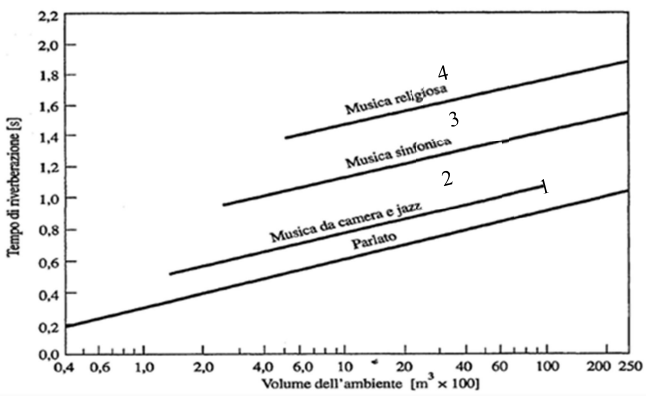

Figure 9: RT Trend related to the use destination of the volume (1 speech, 2 jazz and chamber music, 3 symphonic music, 4 religious music)

Even if the STI values are according to the range requested for congress centers, the predicted Reverberation Time in the church of Trezzano is not so short at middle frequencies, in comparison with the values proposed by literature for speech auditoria (figure 9). In the church of Trezzano the T_{30} is equal to 1.25 sec. at 1kH while in congress centers it is suggested do not exceed the value of 1.1 sec. also when the space volume is very big. The increase of the reverberation time in the Church is helpful to reach the Clarity range $-3<C_{80}<3$ to respect its optimal values for music (16).

The acoustic answer behavior in the church looks much more similar to that one of an Italian Opera House with horseshoe shape, in which the reverberation time has not to be so high in comparison with other Opera Houses in Europe and Concert Halls to respect simultaneously both the speech comprehension and the clarity for music. In those spaces rarely le C_{80} value is negative and his interval is usually $0<C_{80}<4$ (17).

From those considerations a new quality trend for the Reverberation Time in a contemporary church is here proposed (figure 10): it can till 20% longer than the RT suggested for congress center, even if a deeper study that goes beyond this article would be desirable to identify properly the new acoustic range upper limit related to the church volume, considering numerous case studies.

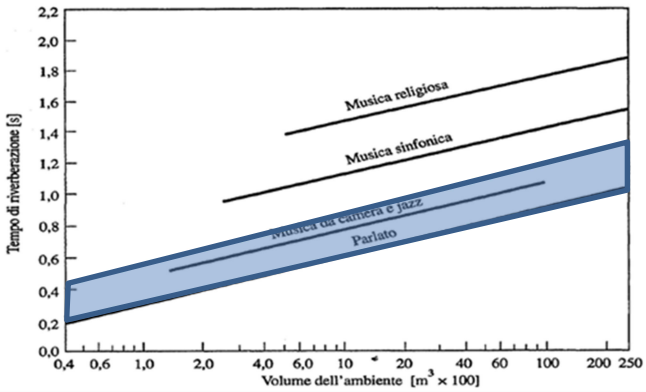

Figure 10: Trend Area for contemporary churches RT colored in blue

In contemporary churches this trend is important to help the acoustic quality for the singing and music creating spaciousness and intimacy without distortions in the words comprehension.

If the organ instrument has to be included (Sant'Ambrogio church is not the case), it is suggested to introduce a design for a variable acoustic answer, as it happens in most of contemporary multipurpose auditoria (18) to increase the reverberation time to be similar to that one of the Churches of the past.

5. CONCLUSIONS

Some main indications for acoustic design of contemporary churches, consider the influence of the recent room acoustics studies applied to other buildings typologies such as congress centers, concert halls, multipurpose auditoria, creating a contamination, a secularization in the church spaces and their acoustic answer.

In particular to maintain a stable acoustic answer, independent from the number of church goers, absorbing benches are introduced. Their absorption coefficient is similar to that one of people. This indication comes from the acoustic design of concert halls.

In addition, from the design of concert halls it is suggested to respect the NC25 curve to reduce the noise produced by different systems (air conditioning system, ventilation, etc.) or by other equipment and to listen to the silence.

Values of STI considered Good and $D_{50}>45\%$ are suggested as it is required in Congress Centers, but a little higher reverberation time is recommended to reach also a range for Clarity similar to that one of Italian horseshoe shape Opera House $0<C_{80}<4$. A response suitable for both speech and music is possible, optimizing the reverberation time and studying the absorbing distribution in the room.

A trend of the RT optimization is suggested, with the upper range limit 20% higher than that one for congress centres, but more case studies should be considered to better define it according to the church volume.

In detail, in the Sant'Ambrogio Church, the choice to use only slightly sound-absorbing materials in the areas close to the church goers guarantees the contribution of the first reflections, creating a

sense of spatiality that envelops the listeners. On the contrary, highly sound-absorbing materials placed far from the source and the listeners, reduce the late reverberation field.

In the Sant'Ambrogio Church the organ instrument is not included. However, if there had been a request, it would have been necessary to consider the acoustics of the church asvariable, extending the reverberation time to that one of an Historical Church.

In the Sant'Ambrogio church people can clearly hear the word of the priest and participate to the assembly listening the other voices. That creates a strong sense of participation, an Ensemble, that helps to find the atmosphere of concentration and introspection increasingly absent in everyday life, redefining a new sense of participation, of ecumenism.

REFERENCES

1. Sara Giron; Lidia Alvarez-Morales; Teofilo Zamarreno. Church acoustics: A state-of-the-art review after several decades of research. J. Sound Vib 2017; Volume 411, Pages 378-408
2. R. Murray Schafer; Il paesaggio sonoro. Ricordi Lim: Milan, Italy, 1977
3. R. Suárez; J.J. Sendra; A. Alonso. Acoustics, liturgy and architecture in the Early Christian Church. From the Domus ecclesiae to the Basilica. Acta Acustica United Acustica 99 (2013) 292–301.
4. E. Cirillo; F. Martellotta. Worship, acoustics and architecture, Multi-Science U.K,Brentwood, Essex, 2006.
5. J. Rindel; C. Christensen; A. Gade. The acoustical history of Hagia Sophia Revived through computer simulation. Proceedings of the Forum Acousticum, Sevilla September 16–20, Sociedad Espa˜nola de Acústica, Madrid,2002.
6. R. Suárez; J.J. Sendra; J. Navarro; A.L. León. The sound of the Cathedral-Mosqueof Córdoba, J. Cult. Herit. 6 (4) (2005) 307–312.
7. J. Navarro; J.J. Sendra; S. Mu˜noz. The Western Latin church as a place for music and preaching: an acoustic assessment Appl. Acoustic 70 (6) (2009)781–789.
8. D. Howard; L. Moretti. Sound and space in Renaissance Venice: Architecture,music, acoustics. Yale University Press, New Haven, 2009.
9. J.J. Sendra, J. Navarro, La acústica de las iglesias medievales en la tecnica de la arquitectura medieval (Acoustics of Medieval churches in the technique of Medieval architecture). Serie Arquitectura (Ed.), Amparo Graciani Secretariado de publicaciones de la US: Seville, 2000.
10. Sergio Cingolani; Renato Spagnolo. Acustica musicale e architettonica; Utet: Torino, Italy, 2005 pp. 827-857; ISBN 88-7750-941-4
11. Michael Vorlander. Auralization: Foundamentals of acoustics, Modelling, Simulation, Algorithms and Acoustic Virtual Reality; Springer: Berlin, Germany, 2008
12. Berardi U. Simulation of acoustical parameters in rectangular churches. J Build Perform Simu 2012;7(1):1–16.
13. Hidaka T.; Beranek LL.; Okano T.; Interaural cross-correlation, lateral fraction, and low- and high-frequency sound levels as measures of acoustical quality in concert halls. J Acoust Soc Am 1995;98:988–1007.
14. J.S. Bradley; R. Reich; S.G: Norcross. A just noticeable difference in C_{50} for speech. Appl. Acoust. 58 (1999):pp. 99-108.
15. Ettore Cirillo. Acustica applicata; McGraw-Hill 1997 pp. 86-87
16. Leo Beranek. Concert halls and Opera Houses. Springer Verlag: Berlin, Germany, pp. 525, 578
17. Maria Cairoli; Livio Mazzarella. Petrarca Theatre: a case study to identify the acoustic parameters trends and their sensitivity in a horseshoe shape opera House. Applied Acoustics 136 (2018) pp.61-75
18. Maria Cairoli. Architectural customized design for variable acoustics in a Multipurpose Auditorium. Applied acoustics 140 (2018) Pages 167-177