PROCEEDINGS of the
23rd International Congress on Acoustics

9 to 13 September 2019 in Aachen, Germany

Building FEM low frequency room models through modal decay time measurements

Roberto MAGALOTTI[1]; Valentina CARDINALI[2]

[1,2] B&C Speakers S.p.A., Italy

ABSTRACT

The treatment of weakly damped rectangular rooms by Morse and Ingard suggested the idea of using participation factors to assess the contribution of individual surfaces – or groups of surfaces – to the decay times of low frequency modes in rooms of generic geometry. This approach requires the numerical computation, through Finite Element Method (FEM) models, of specific eigenfrequencies and eigenfunctions in conditions of rigid walls.

By extracting the experimental values of modal decay times from Room Impulse Response (RIR) measurements of different environments, including a reverberation room, new FEM low frequency models were built by optimizing the acoustic admittance at the room boundaries. Comparison of the outcome of the simulation models to the measured behavior shows that the technique has good predicting power and could be used for the assessment of real boundary conditions.

Keywords: Room acoustics, Finite Element Method, Modal decay time, Acoustic admittance

1. INTRODUCTION

Finite Element Method simulations are increasingly being used in the field of Room acoustics, thanks to the relative ease of setup and the availability of large amounts of processing power at reasonable costs. Despite that, the literature on the use of FEM models in the modal frequency band of small rooms appears to be scarce.

The main difference in the characterization of close environments above or below the Schroeder frequency is that, in the second case, one needs to switch from a single reverberation time based on statistical considerations to a whole set of modal decay times. This set of values, associated with the relevant eigenfrequencies and eigenfunctions, creates a sort of "fingerprint" of the room at low frequencies.

This work, inspired by Morse and Ingard's treatment of weakly damped rectangular rooms (1), tries to bridge the gap between modal behavior measurement and FEM simulations.

2. THEORY

2.1 Weakly damped room

An important issue in the modeling of a weakly damped room in the modal frequency band is finding relations between the boundary conditions at the walls and the decay times of the modal resonances.

In the case of small wall admittance and generic room shape, the modal damping can be calculated starting from the corresponding system of eigenfunctions for rigid walls. The rigid wall eigenfunctions ϕ_N, solutions to the Helmholtz equation, are frequency independent and associated to real eigenvalues. They consist of an orthogonal set with the following normalization

$$\int_V \phi_N \phi_M = V \Lambda_N^0 \delta_{NM} \tag{1}$$

[1] rmagalotti@bcspeakers.com
[2] vcardinali@bcspeakers.com

where V is the room volume and the quantity

$$\Lambda_N^0 = \frac{1}{V}\int_V \phi_N{}^2 \tag{2}$$

is proportional to the energy stored in the single modal component. When a small wall admittance is turned on, following (1, pg. 562) we can apply a variational procedure to estimate the new eigenvalues from the full rigid wall eigensystem, thus obtaining a modal damping proportional to the imaginary part of the corresponding new complex eigenfrequency (or modal wave vector K_N). To a first order approximation, the result is

$$K_N \cong \eta_N - \frac{i}{2V\Lambda_N^0}\sum_j \beta_j \int_{S_j} \phi_N{}^2 \tag{3}$$

where $\{\eta_N, \phi_N\}$ are the rigid wall eigenfrequencies and eigenfunctions, while the j indexes the room walls, each with an associated average specific admittance and surface area $\{\beta_j, S_j\}$. For the sake of simplicity, we suppose the β_j to be real and frequency independent, a condition seldom encountered in practice. Let us write this result in a different fashion

$$K_N \cong \eta_N - \frac{i}{2V}\sum_j \epsilon_{N_j}\beta_j S_j \tag{4}$$

where

$$\epsilon_{N_j} = \langle \phi_N{}^2/\Lambda_N^0 \rangle_{S_j} \tag{5}$$

and the notation $\langle\cdot\rangle_S$ indicates surface average. Each participation factor ε_{Nj} is proportional to the fraction of energy lost (per unit time and per unit area) by the mode N through the surface S_j .

2.2 Rectangular room

It is well known (1,2) that in the case of a rectangular room the set of eigenfunctions is

$$\phi_N = \cos\frac{\pi N_x x}{L_x}\cos\frac{\pi N_y y}{L_y}\cos\frac{\pi N_z z}{L_z} \tag{6}$$

$$\Lambda_N^0 = 1/\left(\epsilon_{N_x}\epsilon_{N_y}\epsilon_{N_z}\right) \tag{7}$$

$$N_x, N_y, N_z = 0,1,2,\ldots \tag{8}$$

where $\varepsilon_{Nj} = 1$ if $N_j = 0$ and $\varepsilon_{Nj} = 2$ if $N_j > 0$.

It can be easily verified that

$$\langle \phi_N{}^2 \rangle_{S_x} = \frac{1}{\epsilon_{N_y}\epsilon_{N_z}} \tag{9}$$

where S_x is the surface of a wall perpendicular to the x direction, with similar formulas for the y and z directions.

It is now straightforward to see that the participation factors ε_{Nj} introduced in equation (5) are the generalization, in the case of generic room shape, of the normalization factors of the rectangular room. Indeed, these factors are responsible for the correct evaluation of the total energy stored in each mode. As it is explained in (1, p. 572) referring to the rectangular room:

> *The reason for the factors ε_N is that, to first order, the mean energy contained in the mode $(0;N_y;N_z)$, for example, is twice that contained in a mode $(N_x > 0;N_y;N_z)$, because the mean square of 1 is 1, whereas the mean square of $\cos(\pi N_x x/L_x)$ is 1/2. Since the rate of withdrawal of energy from the x walls is the same in both cases, the fractional rate of withdrawal when $N_x = 0$ is half that when $N_x > 0$.*

2.3 Modal decay times

It is customary to define a modal decay time MT_{60}, in analogy to reverberation time, as the time required for the sound energy of a single mode to decay by 60 dB(3,4). Starting from equation (4), this leads to the expression

$$MT_{60,N} = \frac{6\ln(10)}{c}\frac{V}{\sum_j \epsilon_{N_j}\beta_j S_j} \tag{10}$$

This formula has the same structure as the classical Sabine's equation for reverberation time, and expresses the modal decay times based on the geometry of the room (volume and surface areas), the normalized admittances and the participation factors ε_{Nj}.

In (5) it was shown that the formula can predict the modal decay times computed by the FEM model of a rectangular room, once the wall admittances are known. The goal of this work is testing the formula experimentally by building FEM simulations of real rooms and fitting the wall admittances to measured modal decay times.

3. EXPERIMENTS

The experiments described in this section were based on measurements of RIR in real environments. The sound sources were low frequency loudspeaker systems, and the measurement technique was the sinusoidal log sweep.

For the FEM model, we adopted the strategy of dividing the internal surfaces of rooms in groups of uniform acoustic admittance, in order to minimize the number of free parameters.

3.1 Rectangular rehearsal room

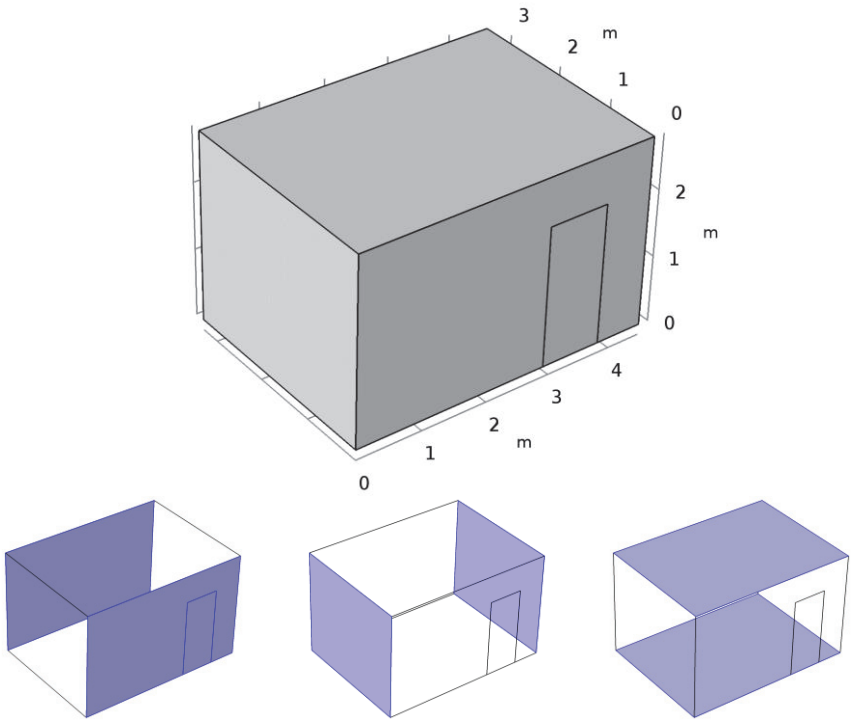

Fig. 1 – Music rehearsal room. In the small images, surface groups for FEM modeling

This experiment concerns a small rectangular rehearsal room for musical instruments, made of gypsum board walls, having an internal volume of 42 m^3. The room was still in construction when the measurements were performed, so there was not any kind of furniture inside, and the opening for the door was closed with a gypsum board slab during the measurements.

The computation of the FEM model confirmed that it is possible, in this case, to use the theoretical, rectangular room values of 1 and 2 for the participation factors ε, according to the classification of modes.

Figure 2 shows the comparison of the modal decay times from measurement and from FEM simulation.

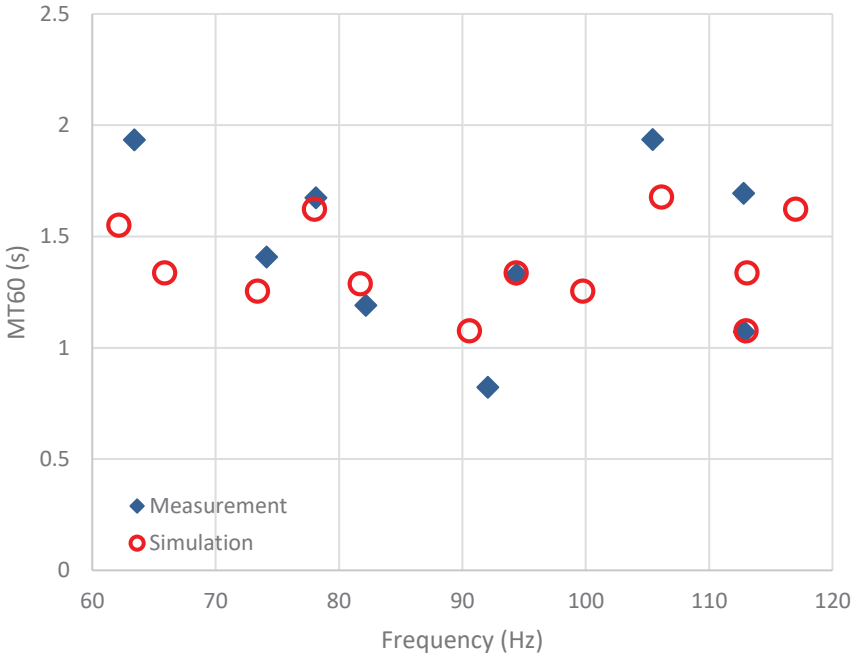

Fig. 2 – Measured and simulated modal decay times for the rehearsal room

All simulated values are within 0.5 seconds of the measured ones. More importantly, the method appears to capture the ups and downs of the modal decay times, even when the numbers are not predicted exactly; see for example the three MT_{60} between 70 and 90 Hz or the two around 110 Hz.

3.2 Quasi-rectangular room

The second experiment concerns a larger room with concrete walls, of nearly rectangular shape, having an internal volume of 71 m^3, used as a testing chamber at B&C Speakers. In this case, the participation factors had to be computed from the simulation of rigid walls eigenfunctions.

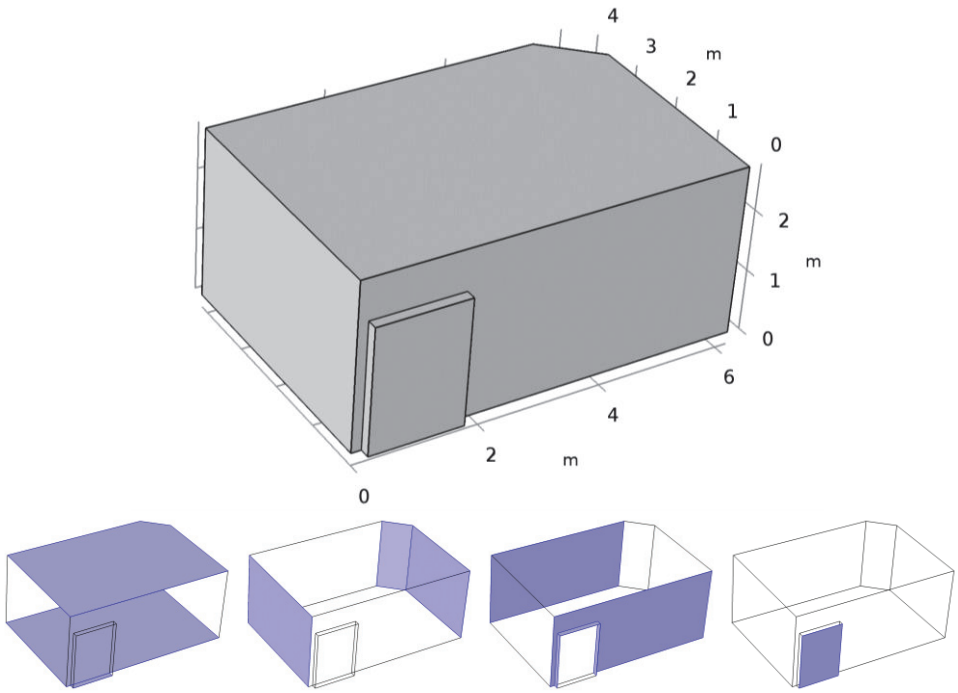

Fig. 3 – B&C Speakers testing room and surface groups for simulation

The choice of surface groups was less obvious than in the purely rectangular case: the small vertical wall in the far corner had to be grouped with one of the adjacent walls. Furthermore, we noticed that modeling the door as a separate surface with its own admittance improved the results.

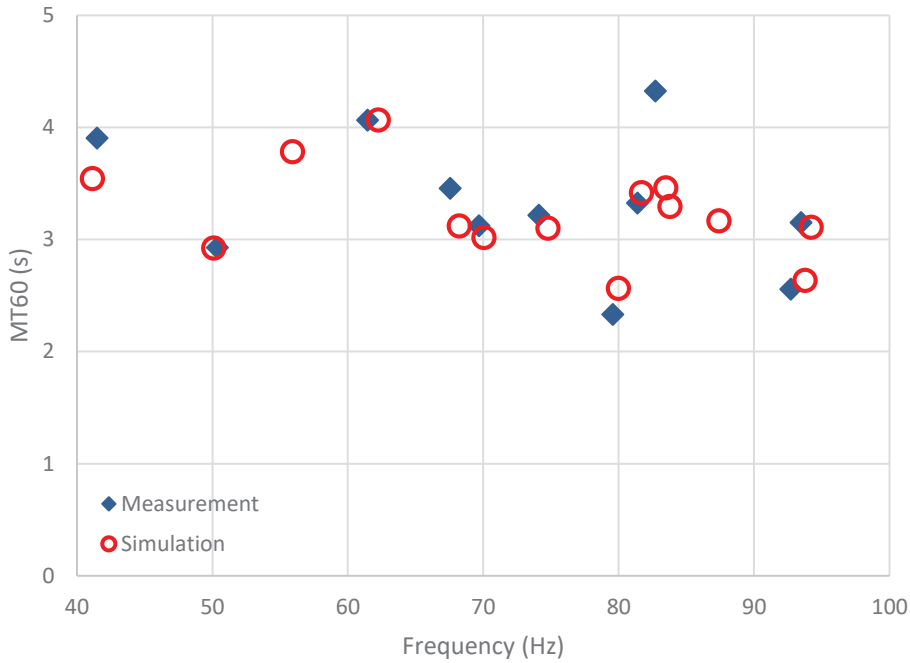

Fig. 4 – Measured and simulated decay times for B&C testing room

As can be seen in Figure 4, this case shows the best fit of all between simulated and measured values. Despite larger absolute values, the difference from prediction to measurement is even smaller than in the rectangular room, with two exceptions: the decay time at 82 Hz is grossly underestimated, probably because of some feature not included in the model (for example, there are two small windows in the room); and the axial mode at 56 Hz is not included because the measurement was very noisy.

3.3 Reverberation room

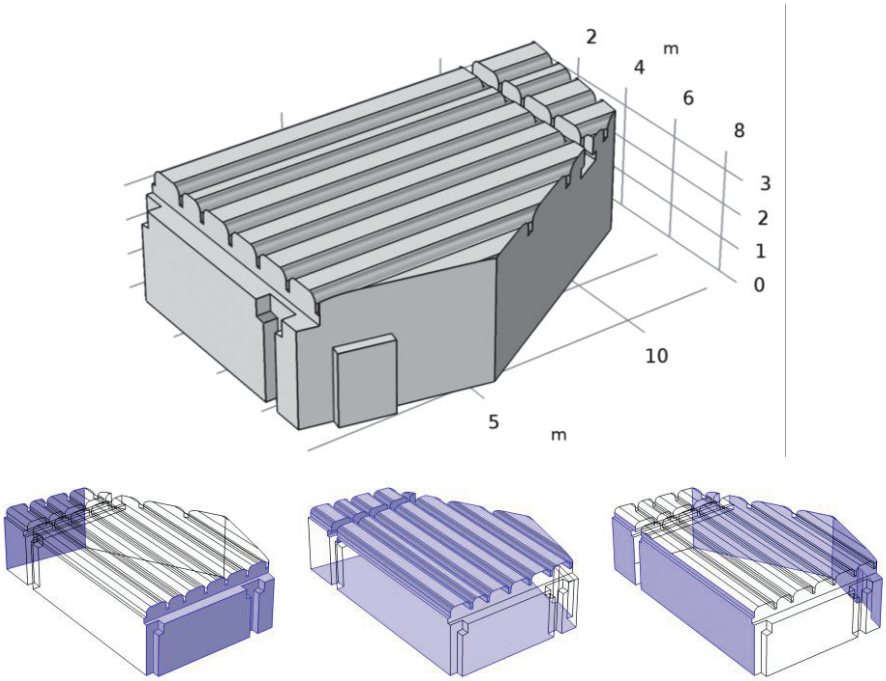

Fig. 5 – Large reverberation room and surface groups

The last experiment involved a large reverberation room of more than 280 m^3, having a first axial mode as low as 15 Hz (6). It has a definitely non-rectangular shape, with slanted walls and several columns and beams inside; but we wanted to test whether the method could produce reasonable results with only three surface groups.

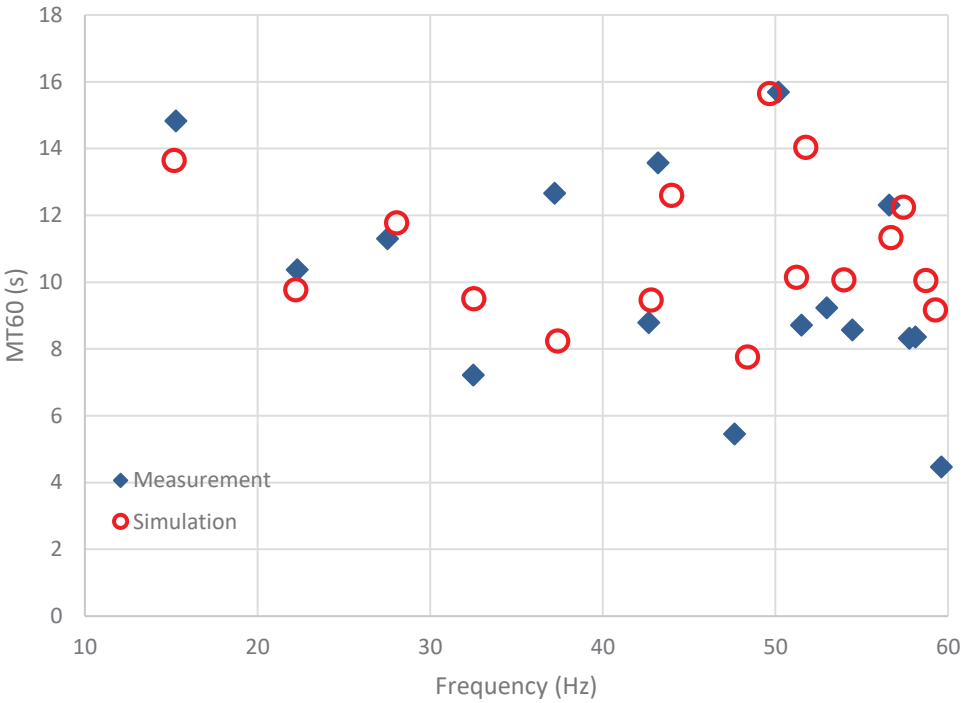

Fig. 6 – Measured and simulated decay times in the reverberation room

Figure 6 shows that the variance in modal decay times is larger than in previous cases, and the modal density grows much faster before 60 Hz; but despite that, and the assumptions and simplifications involved, the model can still paint a fair picture of the relation between boundary conditions, geometry, and modal decay times.

4. CONCLUSIONS

Careful examination of the assumptions behind low frequency modal analysis in rooms led to an extension to generic geometries of the participation factors defined by Morse and Ingard for the case of rectangular rooms.

This extension has been verified first by comparison with FEM models of rectangular rooms, then with models of generic geometries corresponding to real environments. By fitting the boundary conditions of numerical models, and in particular the acoustic admittance of walls, the model exhibits good agreement with measured values of modal decay times. This allows for more realistic models of small rooms in low frequency, with modal decay time profiles closely replicating the acoustic "fingerprint" of real rooms, and paves the way for using the method to assess the acoustic impedance of partitions by measuring modal decays.

ACKNOWLEDGEMENTS

We gratefully acknowledge the support of Donato Masci and the team of Studio Sound Service S.r.l. for the measurements in the music rehearsal box; of Massimo Garai and Dario D'Orazio from the University of Bologna for the measurements in the reverberation room; of Daniele Ponteggia from Studio Ponteggia for invaluable help in the development of the software for modal decay time computation.

REFERENCES

1. Morse P. M., Ingard K. U., *Theoretical Acoustics*, Princeton University Press, New Jersey, USA, 1986

2. Pierce A.D., *Acoustics – An Introduction to Its Physical Principles and Applications*, Acoustical Society of America (1991)
3. Rivet E., Karkar S., Lissek H., “On the Optimisation of Multi-Degree-of-Freedom Acoustic Impedances of Low-Frequency Electroacoustic Absorbers for Room Modal Equalisation”, *Acta Acustica united with Acustica*, vol. 103, pp. 1025-1036 (2017)
4. Mäkivirta A., Antsalo P., Karjalainen M., Välimäki V., “Low-Frequency Modal Equalization Of Loudspeaker-Room Responses”, *111th Convention of the Audio Engineering Society*, Convention Paper 5480, New York, NY, USA (2001)
5. Magalotti R., Cardinali V., “A simulation test bench for decay times in room acoustics”, *2018 COMSOL Conference*, Lausanne, Switzerland (2018)
6. D'Orazio D., De Cesaris S., Guidorzi P., Barbaresi L., Garai M., Magalotti R., "Room Acoustic Measurements Using a High SPL Dodecahedron", *140th Convention of the Audio Engineering Society*, Convention Paper 9507, Paris, France (2016)