PROCEEDINGS of the
23rd International Congress on Acoustics
9 to 13 September 2019 in Aachen, Germany

Modelling of a MEMS transducer using approximate eigenfunctions of a square clamped plate

Karina Abramova(1), Petr Honzík (1), Nicolas Joly(2), Stéphane Durand(2) Michel Bruneau(2)

(1)Czech Technical University in Prague, Czech Republic, abramkar@fd.cvut.cz, honzikp@fd.cvut.cz
(2)Laboratoire d'Acoustique de l'Université du Mans UMR CNRS 6613, France, nicolas.joly@univ-lemans.fr, stephane.durand@univ-lemans.fr, michel.bruneau@univ-lemans.fr

Abstract

The model of electroacoustic MEMS transducer with a moving square shaped clamped plate loaded by a thin fluid gap and a peripheral cavity is presented herein. The behaviour of the transducer, namely the thermal and viscous boundary layers effects originating in the fluid gap between the moving electrode and the fixed one and the strong coupling between the moving electrode displacement and the acoustic pressure field in the fluid gap, have to be described correctly by the model. The modelling approach proposed herein involving the integral method for describing the acoustic pressure in the fluid gap requires an analytical expression of eigenfunctions of the square shaped clamped plate. Such an approximate expression in form of two-dimensional cosine series proposed recently suffers from slow convergence and inaccurate boundary conditions. The solution proposed herein is based on the series expansion over the system of functions satisfying exactly the boundary conditions, which leads to faster convergence, hence lowering computational costs. The proposed eigenfunctions are described and the difference from the previous approximations is discussed. Finally, the acoustic pressure sensitivity of the transducer is presented and compared to the results of a reference finite element model.

Keywords: MEMS transducer, analytical model, plate eigenfunctions, thermoviscous losses

1 INTRODUCTION

The importance of precise models of miniaturized electroacoustic devices has rised recently while the use of such devices is growing in many domains such as the consumer audio, the noise monitoring using wireless sensor networks [1], but also in many other scientific applications which request high precision of such devices used as sensors of acoustic fields [2].

Such models usually employ lumped-element approach [3, 4], full analytical approach [5, 6, 7, 8, 9, 10, 11] or numerical (FEM) simulation [12] in order to take into account thermoviscous losses originating from the boundary layers effect inside the narrow fluid-filled elements (such as the fluid gap between the moving and fixed electrode in the electrostatic transducer) and the strong coupling between the fluid and moving parts of the transducer. In the present work these effects are expressed using a recently published approach [10] employing an integral formulation for the acoustic pressure in the thin fluid layer. Eigenfunctions of the moving part of the transducer (whose approximate analytical expression is searched for herein) are needed by such formulation in order to experess the fluid-structure coupling.

Even though the moving electrodes of miniaturized transducers can have very complex shapes, a simple square plate clamped at all edges has been chosen herein in order to show the ability of the method. The present approach is based on the previous work [11] where the eigenfunctions of the plate have been expressed in the approximate form of two-dimensional cosine series approximating the result of simple numerical (FEM) model of the plate (without fluid). Since such approach suffers from the slow convergence and inaccurate boundary conditions, the modal functions of 1D beam satisfying exactly the boundary conditions have been used herein in the series expansion instead of the cosine functions.

2 THEORETICAL MODEL

The transducer considered herein consists of a square elastic clamped plate with a halfside a. A thin fluid layer (an air gap herein) of thickness h_g is trapped between the plate and a back rigid electrode having the same shape as the elastic plate. This fluid layer is loaded at its periphery by a small cavity of volume V_c (see figure 1).

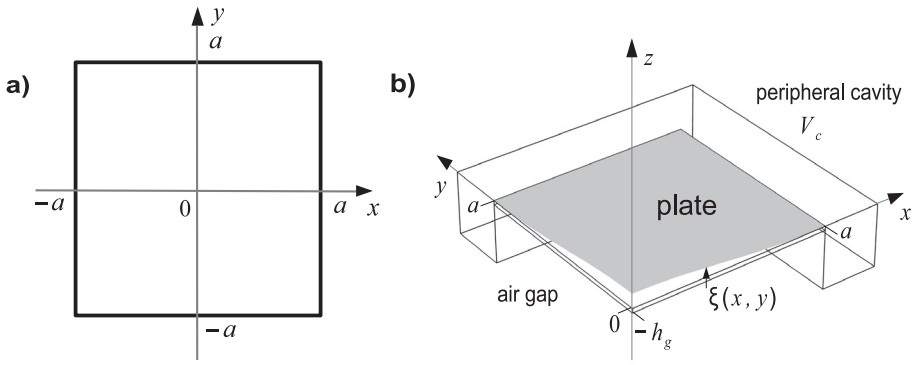

Figure 1. Geometry of the system: a) the dimensions of the square clamped plate and b) geometry of the transducer in the 1st quadrant.

2.1 Eigenfunctions of the plate

The governing equation of motion for a plate loaded by acoustic fields on both sides p_{inc} and $p(x,y)$ can be expressed as [13]

$$[\Delta\Delta - k_p^4]\xi(x,y) = \frac{1}{D}\left(-p_{inc} + p(x,y)\right), \tag{1}$$

where $D = \frac{Eh_p^3}{12(1-\nu^2)}$ is the flexural rigidity, ν being the Poisson's ratio, E the Young's modulus, h_p is the thickness of the plate, $k_p^4 = \frac{M_s}{D}\omega^2$, ω is the angular velocity, $M_s = h_p\rho_p$ is the mass per unit area, ρ_p being the density of the plate.

The solution of the equation (1) can be written as an expansion over the orthonormal eigenfunctions

$$\xi(x,y) = \sum_{mn} \xi_{mn}\psi_{mn}(x,y), \tag{2}$$

where the functions $\psi_{mn}(x,y)$ are the solutions of the homogeneous equation associated with eq. (1)

$$\left(\Delta\Delta - k_{mn}^4\right)\psi_{mn}(x,y) = 0, \tag{3}$$

and $k_{mn}^4 = \left(k_{xm}^2 + k_{yn}^2\right)^2$ and the modal coefficients of the serie are given by

$$\xi_{mn} = \frac{1}{D\left[\left(k_{xm}^2 + k_{yn}^2\right)^2 - k_p^4\right]} \cdot \int_{-a}^{a}\int_{-a}^{a} \psi_{mn}(x,y)[p(x,y) - p_{inc}]\,\mathrm{d}x\mathrm{d}y. \tag{4}$$

Herein, the eigenfunctions $\psi_{mn}(x,y)$ are approximated employing the known symmetric eigenfunctions of the 1D beam [7, 14] as the basis of the serie instead of cosine functions [11] in the following manner:

$$\psi_{mn}(x,y) = \sum_{q=1}^{N}\sum_{r=1}^{N} c_{(qr),(mn)}\phi_q(x)\phi_r(y), \tag{5}$$

$$\text{where} \quad \phi_q(x) = \frac{1}{\sqrt{2a}}\left[\frac{\cos\left(\alpha_q^s x\right)}{\cos\left(\alpha_q^s a\right)} - \frac{\cosh\left(\alpha_q^s x\right)}{\cosh\left(\alpha_q^s a\right)}\right], \quad \text{with} \quad \tan\left(\alpha_q^s a\right) = -\tanh\left(\alpha_q^s a\right). \tag{6}$$

The coefficients $c_{(qr),(mn)}$ have been calculated from the simple numerical (FEM) solution ${}^n\psi_{mn}$ of the equation (3) as

$$c_{(qr),(mn)} = \int_{-a}^{a}\int_{-a}^{a} {}^n\psi_{mn}(x,y)\phi_q(x)\,\phi_r(y)\mathrm{d}x\mathrm{d}y. \tag{7}$$

The eigenvalues k_{xm}, k_{yn} are expressed from the numerically calculated eigenfrequencies ${}^n f_{mn}$ as follows

$$k_{xm} = \sqrt{\frac{2\pi\ {}^n f_{mm}}{2c_p}}, \tag{8}$$

where $c_p = \sqrt{D/M_s}$ is the wave speed on the plate, k_{yn} having the same values as k_{xm}. Note that the numerically calculated eigefunctions ${}^n f_{mm}$ changes with the side of the plate a and have to be fitted from several numerical solutions for different plate sides using a polynom of order 3.

2.2 Coupling between the plate displacement and the acoustic pressure in the thin fluid layer [10]

The propagation of the acoustic pressure in the air gap is governed by the wave equation

$$\left(\partial_{xx}^2 + \partial_{yy}^2 + \chi^2\right) p(x,y) = -U(x,y), \tag{9}$$

where $U(x,y) = \rho_0\omega^2\xi(x,y)/(h_g F_v)$, with a boundary condition $\partial_n p|_a = -j\omega\rho_0 p_c/4F_v Z_c h_g a$ (∂_n denoting the normal derivative), ρ_0 is the air density, Z_c is the impedance of the peripheral cavity, the mean profile of the particle velocity over the thickness of the air gap F_v and the complex wavenumber χ accounting for the effect of thermoviscous losses in the air gap being given for example in [6, 7, 8, 9, 10]. The acoustic pressure field in the small cavity p_c is assumed to be uniform.

The solution of the equation (9) can be expressed as follows:

$$p(x,y) = \int_0^a\int_0^a G(x,x_0;y,y_0)\,U(x_0,y_0)\,\mathrm{d}x_0\mathrm{d}y_0 + p_c I_G(x,y), \tag{10}$$

where

$$\begin{aligned} I_G(x,y) = &\frac{j\omega\rho_0}{8F_v Z_c h_g a}\left[\int_0^a G(x,x_0;y,a)\mathrm{d}x_0 \right.\\ &\left. + \int_0^a G(x,a;y,y_0)\mathrm{d}y_0\right] \\ &+ \int_0^a \partial_{y_0} G(x,x_0;y,a)\mathrm{d}x_0 \\ &+ \int_0^a \partial_{x_0} G(x,a;y,y_0)\mathrm{d}y_0, \end{aligned} \tag{11}$$

and where the Green's function can be chosen as

$$G(x,x_0;y,y_0) = g(x,x_0;y,y_0) + g(x,-x_0;y,y_0) + g(x,x_0;y,-y_0) + g(x,-x_0;y,-y_0), \tag{12}$$

$$\text{with} \quad g(x,x_0;y,y_0) = -iH_0^-\left(\chi\sqrt{(x-x_0)^2 + (y-y_0)^2}\right), \tag{13}$$

H_0^- denoting the Hankel function of the second kind of order "0". The pressure in the peripheral cavity $p_c = \langle p(x,a)\rangle_x$ is supposed to be equal to the mean value of the pressure at the air gap periphery ($y = a$ for example) over the x coordinate.

Using the equation (4) the modal coefficients ξ_{mn} can be obtained from the matrix equation

$$[-\mathbb{A}+\mathbb{B}](\Xi) = (C), \tag{14}$$

where (Ξ) and (C) are the column vectors of elements ξ_{mn} and $c_{mn} = -p_{inc}\int_{-a}^{a}\int_{-a}^{a}\psi_{mn}(x,y)\mathrm{d}x\mathrm{d}y$ respectively, $\mathbb{B}$ is a diagonal matrix of elements $D\left[\left(k_{xm}^2+k_{yn}^2\right)^2-k_p^2\right]$ and the elements of the matrix $\mathbb{A}$ are found by substituting expression for pressure (10) into the integral $\int_{-a}^{a}\int_{-a}^{a}\psi_{mn}(x,y)\,p(x,y)\,\mathrm{d}x\mathrm{d}y$ of equation (4).

3 RESULTS AND DISCUSSION

First, the approximated eigenfunctions are compared with the simple numerical (FEM) result ${}^n\psi_{mn}$ (without consideration for the coupling effect between the plate and air filled acoustic elements) for the plate with the properties given in table 1. As an example, the comparison between the approximated and the numerically calculated eigenfunctions for the first mode $(m,n=1)$ is shown in figure 2 and the differences between these two results for N=1,2,3,7 (the corresponding number of members of the serie is N^2) are shown in figure 3.

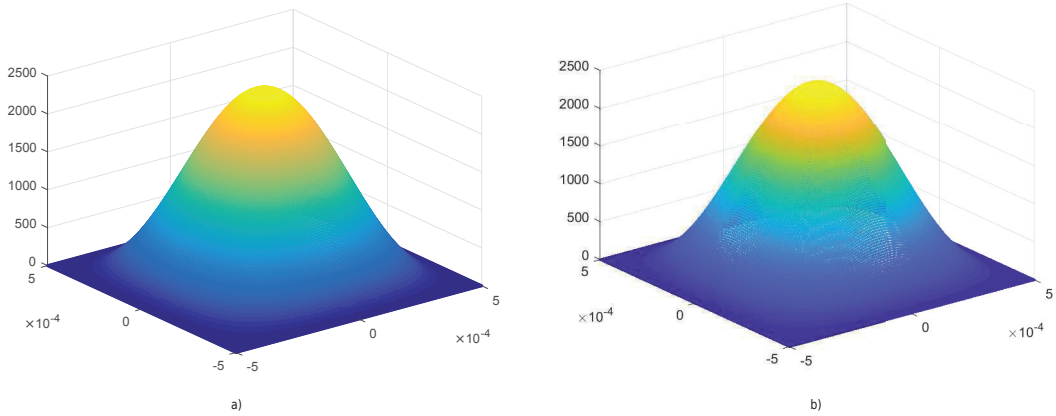

Figure 2. a) Numerical solution ${}^n\psi_{11}(x,y)$ and b) analytical approximation of $\psi_{11}(x,y)$ for $N=3$

While difference and comparison graphs provide visual impressions of the error between the test and comparative result, the estimates of these errors accountning varying number of members of the serie can be calculated as follows:

$$Err = \sqrt{\frac{\sum_{i=1}^{M}(\psi_{mn\,i} - {}^n\psi_{mn\,i})^2}{\sum_{i=1}^{M}{}^n\psi_{mn\,i}^2}}\cdot 100\% \tag{15}$$

where $\psi_{mn\,i}$ is the value of the approximated ψ_{mn} at the i-th node of the mesh (similarly for the reference numericaly calculated eigenfunction ${}^n\psi_{mn}$) and M is the number of mesh nodes. The dependence of this error on the summation limit N in equation (5) is shown in figure 4.

Figures 3 and 4 show clearly that the present method provides better approximation of the eigenfunctions comparing to the previous approach [11] and leads to faster convergence of the serie.

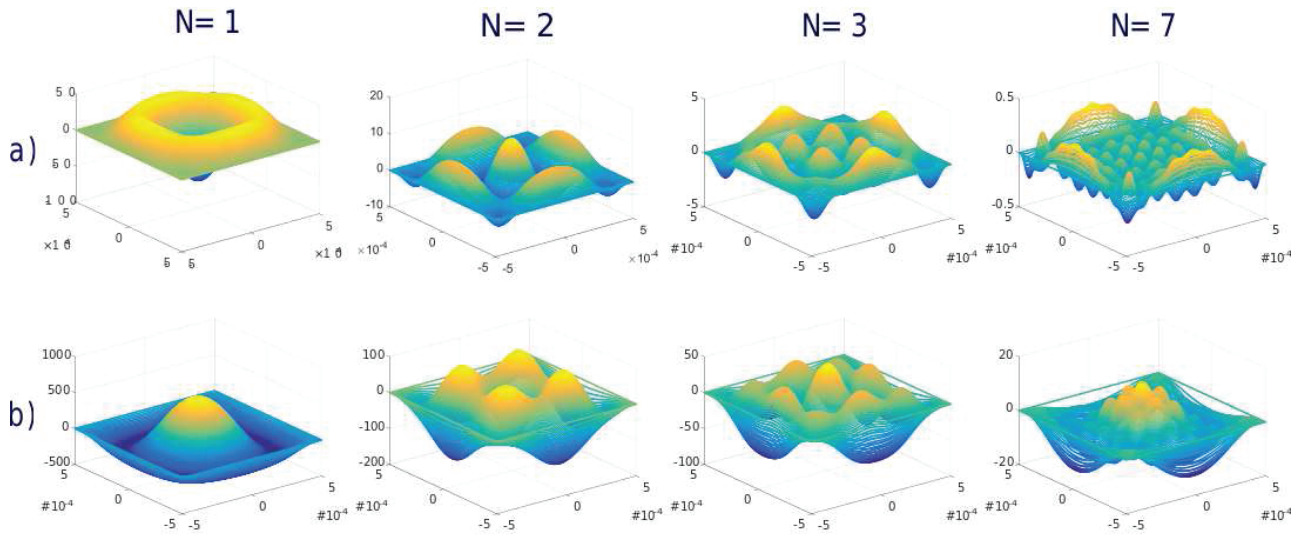

Figure 3. Difference between numerical solution and a) present analytical approximation and b) approximation from [11]

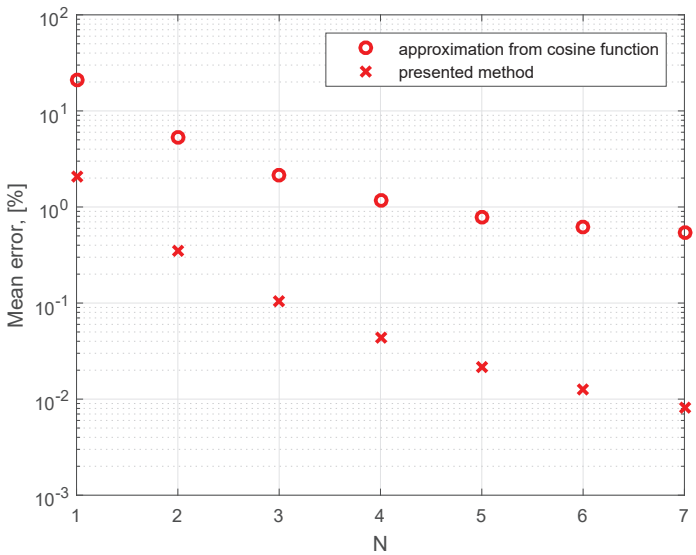

Figure 4. Mean error of the approximation for m,n=1,1

The acoustic pressure sensitivity of an electrostatic transducer is given by $\sigma = -U_0\bar{\xi}/(h_g p_{inc})$, where $\bar{\xi}$ is the mean displacement of the moving electrode and U_0 is the polarization voltage (herein $U_0 = 30V$). Figure 5 shows the frequency dependence of the pressure sensitivity obtained by using the present approach compared with the numerical result obtained from full 3D FEM model of the whole structure using Comsol Multiphysics software [12] (all properties of the transducer and the fluid are given in tables 1 and 2). A good agreement

between those results can be observed, the damping in the analytical approximate solution being slightly underestimated.

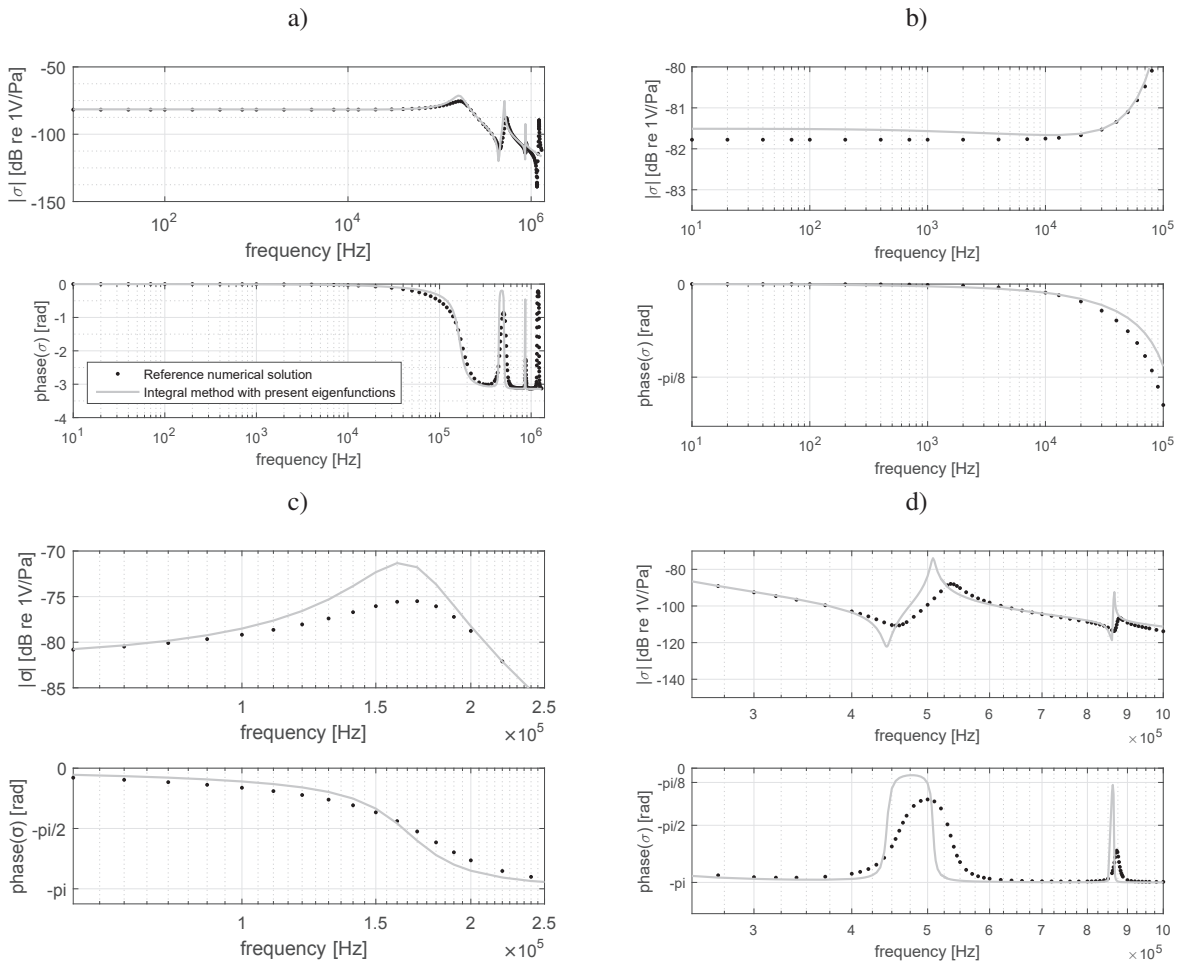

Figure 5. The comparison between the acoustic pressure sensitivity obtained using the present approach (full line) and the one obtained from FEM simulations (black points); a) module and phase of the sensitivity in the whole frequency range, b) detailed view on the flat part of the sensitivity, c) detailed view on the first resonance, d) detailed view on the higher frequency range.

Table 1. Dimensions of the transducer

Parameter	Symbol	Value	Unit
Plate side	a	$1 \cdot 10^{-3}$	$[m]$
Plate thickness	h_p	$10 \cdot 10^{-6}$	$[m]$
Air-gap thickness	h_g	$10 \cdot 10^{-6}$	$[m]$
Cavity volume	V_c	$1 \cdot 10^{-10}$	$[m^3]$
Plate density	ρ_p	2330	$[kg/m^3]$
Young's modulus	E	$160 \cdot 10^9$	$[Pa]$
Poisson's ratio	ν	0.27	$[-]$

Table 2. Air properties

Parameter	Symbol	Value	Unit
Adiabatic sound speed	c_0	343	$[m \cdot s^{-1}]$
Air density	ρ_0	1.20	$[kg \cdot m^{-3}]$
Shear dynamic viscosity	μ	$1.81 \cdot 10^{-5}$	$[Pa \cdot s]$
Permittivity	ε_0	$8.8542 \cdot 10^{-12}$	$[F \cdot m^{-1}]$
Thermal conductivity	λ_h	$25.7 \cdot 10^{-3}$	$[W/(m \cdot K)]$
Specific heat coefficient at constant pressure per unit of mass	C_p	1005	$[J/(kg \cdot K)]$
Ratio of specific heats	γ	1.4	$[-]$

4 CONCLUSIONS

An approximation of the eigenfunctions of the square clamped plate (used as a moving electrode of a MEMS transducer) expressed in the form of two-dimensional series expansion over the modal functions of 1D beam, the coefficients of the serie being calculated from the simple numerical model of the plate, has been proposed herein. Comparing to the previously explored method using the series of cosine functions this approach leads to faster convergence of the series and enables to satisfy exactly the boundary conditions. The approximated eigenfunctions has been used in a model of the MEMS transducer. In this model the integral formulation taken from the literature was employed to express the acoustic pressure field in the thin fluid layer coupled with the displacement of the plate. The pressure sensitivity of the transducer shows very good agreement with the complete 3D numerical (FEM) simulation taken as reference, only slight underestimation of the damping in the analytical approximate solution can be observed near the resonance frequencies.

The method presented herein shows the ability to provide correct models of miniaturized transducers containing the moving electrode in form of square clamped plate. Future works will include the testing of this method on more complex shapes of the moving electrodes.

ACKNOWLEDGEMENTS

This research has been partially supported by the Grant Agency of the Czech Technical University in Prague, grant No. SGS18/200/OHK2/3T/16

REFERENCES

[1] Mydlarz C., Salamon J., Bello J.P.: The implementation of low-cost urban acoustic monitoring devices, Applied Acoustics **117**, 207-218 (2017).

[2] Guianvarch C., Gavioso R.M., Benedetto G., Pitre L. and Bruneau M.: Characterisation of condenser microphones under different environmental conditions for accurate speed of sound measurements with acoustic resonators, Rev. Sci. Instrum. **80**(7), 07 4901 (2009).

[3] Estèves J., Rufer L., Ekeom D., Basrour S.: Lumped-parameters equivalent circuit for condenser microphones modeling, J. Acoust. Soc. Am. **142**, 2121-2132 (2017).

[4] Abramova K., Honzík P.: Experimental estimation of unknown parameters of equivalent circuits of low-cost electret microphones, Akustické listy **23**(1-4), 9-17 (2017).

[5] Zuckerwar A. J.: Theoretical response of condenser microphones,J. Acoust. Soc. Am. **64**(5), 1278-1285 (1978).

[6] Bruneau M., Škvor Z. and Lotton P.: An equivalent network modelling the strong coupling between a vibrating membrane and a fluid film, Acta Acust. united Ac. **2**, 223-232 (1994).

[7] Le Van Suu T., Durand S., and Bruneau M.: On the modelling of clamped plates loaded by a squeeze fluid film: application to miniaturised sensors, Acta Acust. united Ac. **96**(5), 923-935 (2010).

[8] Lavergne T., Durand S., Bruneau M., Joly N. and Rodrigues D.: Dynamic behavior of the circular membrane of an electrostatic microphone: Effect of holes in the backing electrode, J. Acoust. Soc. Am. **128**(6), 3459-3477 (2010).

[9] Lavergne T., Durand S., Joly N., Bruneau M.: Analytical Modeling of Electrostatic Transducers in Gases: Behavior of Their Membrane and Sensitivity, Acta Acust. united Ac. **100**, 440-447 (2014).

[10] Honzík P. and Bruneau M.: Acoustic fields in thin fluid layers between vibrating walls and rigid boundaries: integral method. Acta Acust. united Acust. **101**(4), 859 - 862 (2015).

[11] Abramova K., Honzík P., Joly N., Durand S. and Bruneau M.: Modelling of a MEMS transducer with a square plate loaded by a thin fluid layer, Euronoise 2018. Heraklion, Crete, 27.05.2018 - 31.05.2018. Madrid: European Acoustics Association. 2018, s. 337-340. ISSN 2226-5147.

[12] Herring Jensen M. J., Sandermann E. Olsen: Virtual prototyping of condenser microphone using the finite element method for detailed electric, mechanic, and acoustic characterisation. Proceeding of Meetings on Acoustics **19**, 030039, (2013).

[13] Leissa A.W.: Vibration of plates, Scientific and Technical Information Division, Natl. Aeronaut. Space Adm. (1969).

[14] Novak A., Honzík P., Bruneau M.: Dynamic behaviour of a planar micro-beam loaded by a fluid-gap: analytical and numerical approach in a high frequency range, benchmark solutions, J. Sound Vib., DOI information: 10.1016/j.jsv.2017.04.026 (2017).