PROCEEDINGS of the
23rd International Congress on Acoustics

9 to 13 September 2019 in Aachen, Germany

Additional sound insulation panels ZIPS – experience of 20 years of application

Alexander BOGANIK[1]

Anatoly LIVSHITS[2]

[1, 2] Acoustic Group company, Russia

ABSTRACT

In apartment buildings and offices is often the task of increasing the sound insulation of walls and ceilings from airborne noise. Traditional methods of solving this problem, gypsum board on metal or wooden frame - have low efficiency. This is, in particular, due to transmission sound vibrations through the frame and the presence of a large number of wall lining elements that must be properly performed during installation. The frameless panels for additional sound insulation (ZIPS) were developed in 1999 in Russia. They have high rates of additional sound insulation (9...18 dB) depending from thickness of 43...120 mm. This system was patented and still is widely in use. In addition, the system provides the necessary durability and ease of installation. Over 20 years, the system has undergone several upgrades. The article describes the physical principle of the ZIPS-system, the calculation data and laboratory acoustic measurements, latest modification of the system with adjustable mounts.

Keywords: Additional, Sound, Insulation

1. INTRODUTION

Owners or tenants of premises in apartment buildings or offices regularly face the problem of insufficient sound insulation between adjacent rooms. This is due to the fact that designed floor and wall constructions are in practice have much lower sound insulation properties than required. At the same time, noise levels in residential premises and offices only increase from year to year.

The daily work of the authors of this article with the apartment owners complaining to the lack of sound insulation allowed us to determine the minimum value of additional insulation of airborne noise, which is necessary for a qualitative increase of acoustic comfort. This value is +10dB of R'w index.

Increasing the sound insulation of load-bearing walls and ceilings by increasing the mass and thickness is recognized as not very effective solution, as it usually requires a significant increase of the load to the floor and/or foundation resulting sufficiently low values of additional sound insulation (on average no more than +6 dB). Therefore, over the past decades, the issues of increasing the sound insulation of existing bearing walls or ceilings are solved through the use of multi-layer claddings and suspended ceilings, theoretically allowing to achieve the additional sound insulation values more than 30 dB for airborne sound insulation index R_w. The standard solution, widely used in construction, for additional sound insulation is a supporting metal or wooden frame associated with an existing wall or ceiling. The front surface of the frame is covered with plasterboard sheets and inner space between the studs is filled with fibrous sound-absorbing material (mineral wool).

Despite the high additional sound insulation values in theoretical prediction, such constructions used on real objects, show relatively low results (no more than 6 dB). The twenty-year study by the authors of this article are devoted to the analysis of existing problem and development of alternative constructions for more efficient additional sound insulation solution for existing walls and ceilings.

[1] Alexander.Boganik@acoustic.ru
[2] Anatoly.Livshits@acoustic.ru

2. ACOUSTIC DISADVANTAGES OF A FRAME SYSTEM

The theoretical substantiation of the effectiveness of multilayer systems for additional sound insulation is based on the idea of strictly sequential and layer-by-layer sound transmission through the different layers of materials (Figure 1, way A).

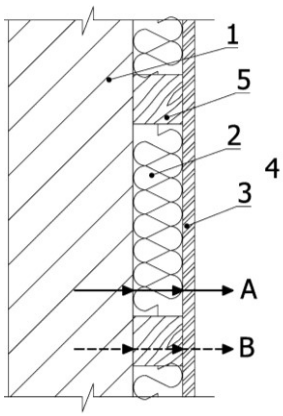

Figure 1 – Wall construction with additional sound insulation

On the way A, sound vibrations from the wall 1 are radiated into the layer of sound absorber 2, for example, from mineral wool. Then the partially absorbed energy transmits to the sound-reflection layer 3, which is made of an acoustically flexible plate material, for example, plasterboard. Significantly reflected and scattered sound energy is radiated by layer 3 to the room 4. Moreover, due to the use of thin covering boards (up to 20 mm), the effect of abnormally low sound emission (acoustic short circuit) appears for such linings in the frequency range up to the frequencies of the wave coincidence. As a result, the calculated efficiency of multilayer systems for additional sound insulation is more than 30 dB according to the R_w index.

However, as soon as we consider the actual structure of additional sound insulation construction, a bearing wooden or metal frame appears to ensure construction rigidity, flatness and safety. In this case the actual sound transmission through the system goes by ways A+B. Sound vibrations simultaneously propagate not only sequentially through the 1-2-3 layers (way A), but also through the frame 5 directly connected to surface 1 and 3 and further into room 4 (way B). The flexible covering 3, due to the strong attachment to the frame, significantly “leaves” the “acoustic short circuit” mode and begins to re-radiate more sound waves into the room. Thus, the real efficiency of multi-layered insulation systems has about 6 dB, which is usually not good enough. The refusal to use the supporting frame keeping the strength of the whole construction would significantly increase the value of additional sound insulation of construction without increasing it’s thickness and surface density.

3. ZIPS PANEL SYSTEM

In 1999 Acoustic Group company in Russia developed and patented a frameless system for additional sound insulation for the load-bearing walls and ceilings, which was named ZIPS. The principal difference between this system and the known solutions was the frameless method of fixing the sandwich panel. The scheme of the ZIPS system is shown in Figure 2.

The basis of the system is a 1200x600 mm sandwich panel consisting of sound reflecting 1 and sound absorbing layers 2, glued together. The sandwich panel without the use of a supporting frame is fixed to the wall 7 through vibration isolated attachment points 3, which are made in panel by special method at the production site. Each sandwich-panel has a tongue-and-groove joint and eight vibration isolated attachment points with silicone material. To the floor 6, ceiling and side surfaces the sandwich panels are adjacent through a layer of elastic tape 4. After installation, the panels are closed with a finishing layer of gypsum plasterboard 5.

In compare to usual frame lining the principle of the successive passage of sound energy through the sound-absorbing and sound-reflecting material layers in ZIPS system is more effective. Due to the elastic attachment through anti-vibration mounts to the wall or to the ceiling, a thin (20 mm) gypsum-fiber board of sandwich panel retains the properties of abnormally low sound emission in the frequency range up to 1000 Hz.

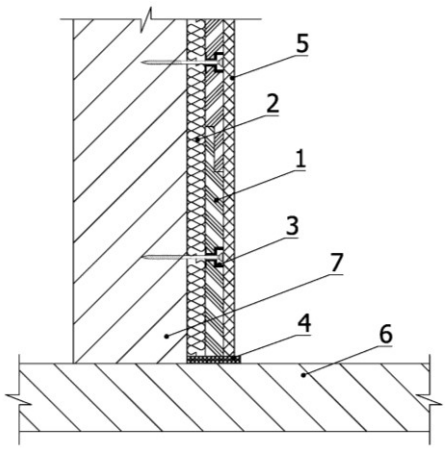

Figure 2 – Two-layers sandwich panel ZIPS

In addition, these attachment points also weaken the direct transmission of sound vibrations from the wall to the gypsum-fiber sheets of the sandwich panel. The finishing layer of gypsum board increases the value of additional sound insulation by 1 dB for R_w index, furthermore, protecting the anti-vibration mounts during the finishing works. Great attention in the construction of the ZIPS sandwich panel is paid to the dynamic stiffness of the sound-absorbing layer of mineral wool. It is chosen in such a way that, on the one hand, it minimizes the transmission of vibrations through the structure of a fibrous material from the wall to the layer of the gypsum-fiber board. For this, the dynamic stiffness of the material should be as low as possible. At the same time, the layer of sound-absorbing material should be as rigid as possible in order to avoid the deformations of the sandwich panel when mounted on a wall or ceiling. The compromise was found in the dynamic stiffness of the sound-absorbing layer, equal to s = 10 ± 2 MN/m3, what was confirmed by the high values of additional isolation of the airborne noise. The working range of the ZIPS-system is controlled by the thickness of the sound-absorbing layer of the sandwich panel. Depending on the modification of the panels, it varies from 20 to 100 mm. This increase in thickness extends the lower limit of the working range for the system starting from 125 to 80 Hz.

20 mm thick gypsum-fiber sheet with a surface density of 25 kg/m2 is used as a sound-reflection layer in all models of ZIPS.

4. ZIPS-SYSTEM COMPUTATIONAL-PHISICAL MODEL

Simultaneously with the development and optimization of ZIPS-system design, the development of computational-physical model was carried out, allowing to describe and improve the work of a frameless layered sound-insulating system with anti-vibration mounts [1].

The matrix method was proposed for calculating sound transmission through a multi-layered structure, which is based on the wave method, due to the connection between the values of total sound pressure and the oscillatory velocity at the incoming and outgoing boundaries of each layer [2]. The passage of a sound wave through each layer is described by transition matrix of the layer. Thus, this method allows you to calculate the sound insulation of any desired number of layers, by multiplying their matrices (1), Figure 3:

$$\begin{pmatrix} P_{0\Sigma} \\ V_{0\Sigma} \end{pmatrix} = \begin{pmatrix} S_1^{(n)}(\alpha\beta) & jS_2^{(n)}(\alpha\beta) \\ jS_1^{(n)}(\beta\alpha) & S_2^{(n)}(\beta\alpha) \end{pmatrix} \cdot \begin{pmatrix} P_{n+1,\Sigma} \\ V_{n+1,\Sigma} \end{pmatrix}, \quad (1)$$

где $P_{0\Sigma}$ – the total sound pressure of incident sound wave; $V_{0\Sigma}$ – the oscillatory velocity of incident sound wave; $P_{n+1,\Sigma}$ – the total sound pressure at the output of the structure through n+1 layers; $V_{n+1,\Sigma}$ – the oscillatory velocity at the output of the structure through n+1 layers; $S_1^{(n)}(\alpha\beta)$, $jS_2^{(n)}(\alpha\beta)$, $jS_1^{(n)}(\beta\alpha)$, $S_2^{(n)}(\beta\alpha)$ – coefficients of the total sound-transition matrix obtained by multiplying the matrices of each of the n + 1 layers.

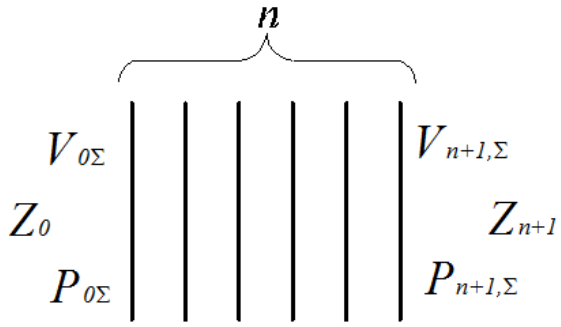

Figure 3 – To the calculation of the passage of sound through the n - layer structure (1), Z_0 and Z_{n+1} – the wave impedances of the layers

To simplify the practical calculation, a physical model has been proposed, according to which, as the wave impedance (2) for flexural vibrations of rigid and wave-thin layers (plate) of the structure the geometric mean of their resonant and anti-resonant values is to be used [3].

$$\overline{Z} = j\sqrt{Z_k^{рез} Z_k^{a}} = j\frac{\sqrt{\omega_{k,k+1}} \cdot M(\omega_{k+1} - \omega_k)}{4\sqrt{2} \cdot \sqrt[4]{\omega_k \omega_{k+1}}}, \quad \text{where} \tag{2}$$

$$\omega_{k+1} - \omega_k = \frac{\omega_m \Delta}{N_u} = \frac{4\pi C_L h}{S\sqrt{12}}, \tag{3}$$

$M = \rho h$ – total surface weight of the plate; $\omega_{k,\,k+1}$ – resonance frequency of the k-th or k+1 -th mode; h –the plate thickness; S – the area of the plate; C_L – velocity of longitudinal waves in the plate material.

Also, the computation-physical model allows to calculate the transmission of sound through the structure, taking into account the friction that occurs in the vibration isolated attachment points of the panels. In this case, the type of friction is assumed to be viscous, characterized for the entire panel as the special conventional coefficient of friction (4).

$$R = m\,\omega_0\,\eta, \tag{4}$$

where ω_0 – the resonant frequency of the gypsum-fiber layer with anti-vibration attachment point with mass m, located on the elastic sound-absorbing material; η – coefficient of mechanical losses in the silicone sleeve of the vibration isolated attachment point.

Based on this theory the computer program was developed, allowing you to get results of additional sound insulation and to choose the optimal ratio of components of the ZIPS-systems by changing the characteristics of the layers, their number, the magnitude of the coefficient of loss in the silicon sleeve.

One of the significant conclusions proved with the use of the calculation model is the rejection of the use of four-layer sandwich panels in favor of two-layer construction, as double-layer system is more optimal in cost/efficiency ratio. Figure 4 shows the calculated graphs of the sound insulation using four-layer panels ZIPS-7-4 70 mm and double-layer panels ZIPS-7-2 70 mm on the brick wall 120 mm. Even though the surface density of ZIPS-7-4 panel is 1,5 times higher than ZIPS-7-2, their additional sound insulation is quite similar at low and medium frequencies.

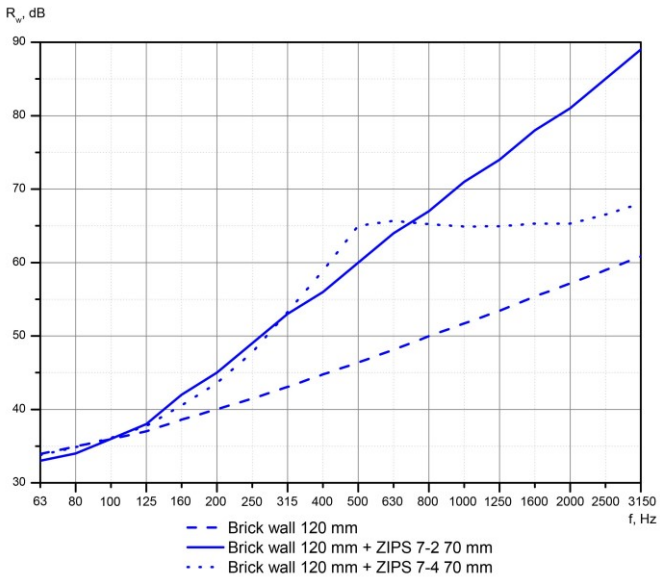

Figure 4 – Calculated values of sound insulation for of ZIPS-7-4 (4 layers) and ZIPS-7-2 (2 layers) systems on the brick wall 120 mm

5. RESULTS OF ZIPS SYSTEM ACOUSTIC MEASUREMENTS

The acoustic characteristics of the ZIPS-7-4 sandwich panel were tested in The Building Test Centre (Loughborough, UK) in 1999. Graphs with measurement results are shown on Figure 5.

The base wall of double gypsum boards on 90 mm thick metal frame had the airborne noise sound insulation index R_w = 52 dB. The overall sound insulation of the structure without the finish layer of gypsum board on top was R_w = 62 dB. Thus, the index of additional sound insulation of ZIPS-7-4 model was R_w = 10 dB with a panel thickness of 70 mm. Measured later, in the Nizhny Novgorod Architectural and Construction University acoustic laboratory (Nizhny Novgorod, Russia) sound insulation characteristics of the ZIPS-7-2 panels showed their efficiency in the region of R_w = 9 dB, which was fully confirmed by the calculated data.

Investigations by computation-physical model have confirmed the idea to refuse from the four-layer system in favor of a two-layer one. Also, the design of the vibration-insulated attachment points had to be done more elastic, to prevent the transfer of vibrations from existing wall to the gypsum-fiber layer.

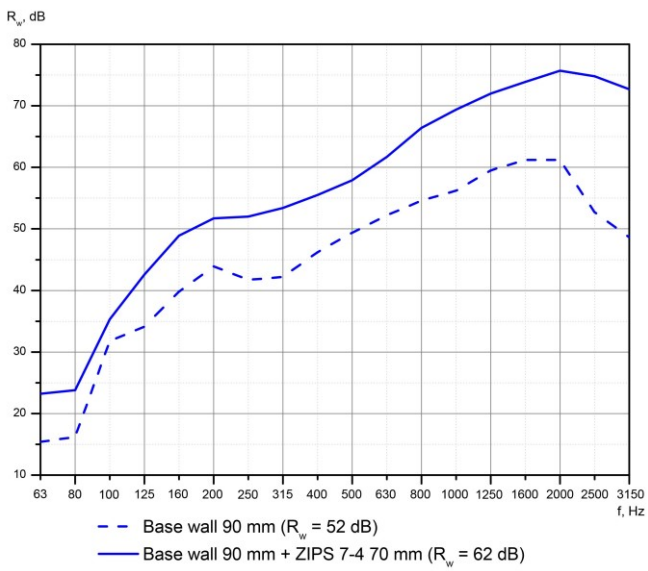

Figure 5 – Graph of airborne noise isolation of a four-layer sandwich panel ZIPPS-7-4 70 mm on existing wall

In 2006, the second generation of panels for additional sound insulation was released: three models of double-layer sandwich panels ZIPS-Vector, ZIPS-Module and ZIPS-Cinema, the thickness of which was respectively 40, 70 and 120 mm. The system with a two-layer ZIPS-Module panel 70 mm thick with a finishing layer of drywall 12.5 mm in the laboratory on the brick wall with the index R_w = 50 dB showed ΔR_w = 13 dB of additional insulation of airborne noise (Figure 6). Thus, the performed studies made it possible to simplify the construction and, with a comparable thickness, obtain the increment of additional sound insulation index R_w by 4 dB (+3 dB without taking into account the use of a finishing gypsum board layer).

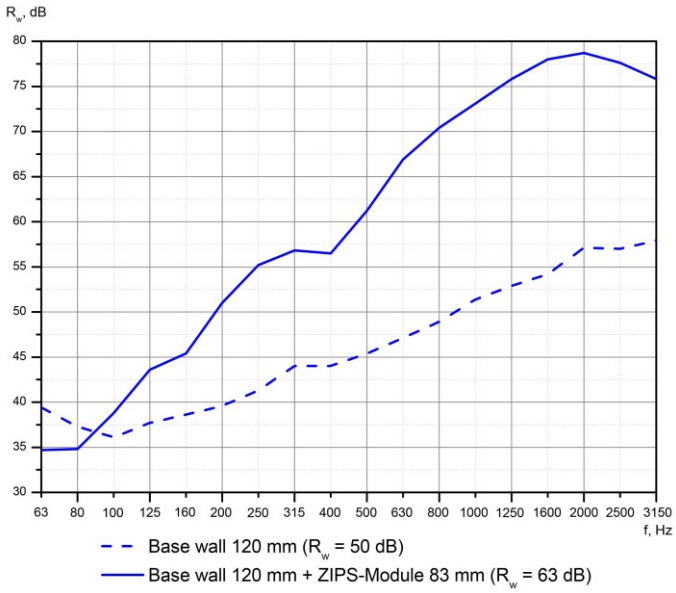

Figure 6 Graph of sound insulation of the ZIPS-Module system 83 mm (sandwich panel 70 mm + gypsum board 12.5 mm) on the brick wall 120 mm

Indexes of additional sound isolation of the second generation ZIPS-systems are given in Table 1. During the period from 2006 to 2016, about 2.000.000 m2 of all modifications of ZIPS-systems were produced and delivered to customers.

Table 1 – Additional sound insulation of the second generation ZIPS-system

Model	ZIPS-Vector	ZIPS-Module	ZIPS-Cinema
System thickness, mm	53	83	133
Additional Sound Reduction Index ΔR_w, dB	10	13	17

6. THE IMPROVING EFFICIENCY OF ZIPS-SYSTEM

Along with the release of second-generation panels, research to improve the acoustic efficiency of the ZIPS-system did not stop. Many solutions have been tested, such as the use of viscoelastic membranes between sandwich panels and a finishing plasterboard layer, the separation of 20 mm gypsum-fiber sheet into two thinner layers of 10 +10 мм or 12 + 8 mm glued together using elastic layer. All these options significantly increase the cost of the product. But the index of additional isolation is increasing by not more than 1 dB, which in general may be the measurement error. However, since the first invention, it was known that there is a reserve for improving the sound insulation of a sandwich panel by reducing the rigidity of the sound-absorbing layer. Therefore, in the third generation of the ZIPS-III-Ultra system, which was released in 2016, the “soft” layer of the sandwich panel with 8 anti-vibration mounts of elastomer (Sylomer) were used. This design made it possible to reduce total dynamic stiffness of sound-absorbing layer in combination with high strength and stability of the structure.

The ZIPS-III-Ultra system is shown in Figure 7. The 43 mm thick sandwich panel, 1200 x 600 mm in size, consists of the sound-reflection layer 1 and the sound-absorbing layer 2, that are fixed to the

brick wall 7 with vibration insulated attachment points 3 through vibration proof joints 8. Each sandwich panel has eight vibration insulated attachment points and eight vibration proof joints. To the floor 6, ceiling and side surfaces the sandwich panels are adjacent through a layer of elastic tape 4. After installation this construction is covering by 12,5 mm finishing plasterboard 5.

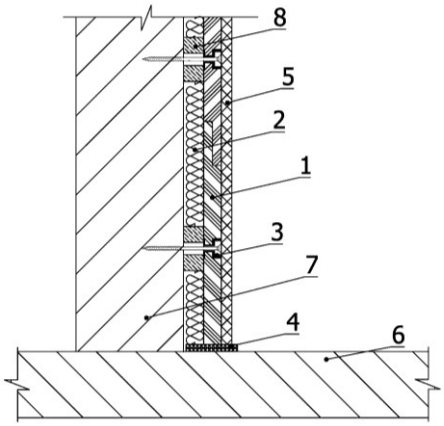

Figure 7 – Scheme of additional sound insulation system ZIPS-III-Ultra 55 mm (sandwich panel 43 mm + sheet of drywall 12.5 mm)

New solution with point vibration-insulating connections (vibration proof joints) in the design of the system gave good results. The index of additional insulation of airborne noise of ZIPS-III-Ultra system on the base wall with the initial index R_w = 50 dB was ΔR_w = 13 dB at a thickness of 55mm and was equal to the efficiency of the second generation ZIPS- Module system (ΔR_w = 13 dB). Graphs of additional sound insulation of those systems from different generations are shown in figure 8.

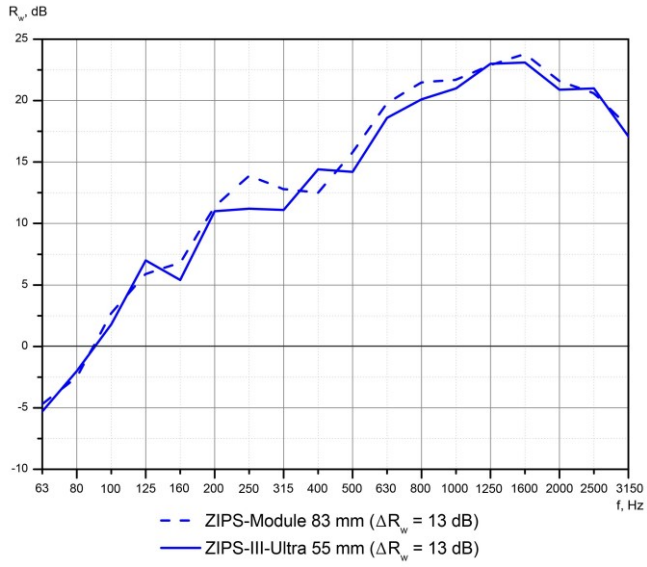

Figure 8 – Graphs of additional sound insulation of ZIPS-Module and ZIPS-III-Ultra panel systems on a 120 mm base brick wall with initial airborne sound reduction index R_w = 50 dB

7. ZIPS-Z4 SYSTEM WITH SURFACE ADJUSTMENT FUNCTION

Since the development of the first ZIPS sandwich panel in 1999, the issue of flatness of the base walls or ceilings was remained extremely relevant. The frameless system did not ensure the flatness of initially uneven surface and, as a result, the surface with additional sound insulation system completely replicated the shape of uneven load-bearing walls or ceilings. No problems appeared if the existing surfaces were even, but if, for example, a brick wall had irregularities that appeared during the stonework, the wall had to be pre-leveled with plaster layer up to 20 mm thick or more. This action had a little effect on the sound insulation, but required the use of additional materials, increased the thickness of the entire system and installation time. Therefore, in 2019, a new, patented fourth-generation ZIPS system with the function of leveling the surface of walls or ceilings was proposed.

The scheme of the construction of the ZIPS-Z4 system is shown in Figure 9. A sandwich panel with a thickness of 43 mm and a size of 1200x600 mm, consisting of a sound-reflecting 1 (20 mm) and sound-absorbing 2 (20 mm) layers, rests on the wall 7 through adjustable vibration proof props 8 and is fixed to the wall at the vibration insulated attachment points 3.

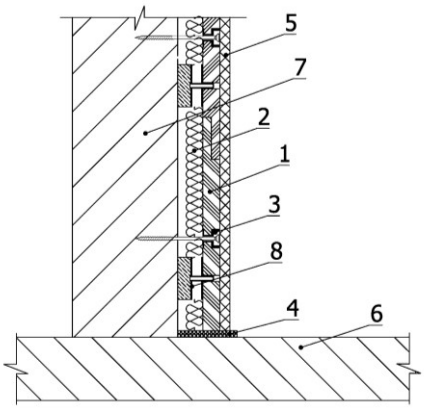

Figure 9 – Scheme of additional sound insulation ZIPS-Z4 system 55 mm with alignment function

(sandwich panel 43 mm + plasterboard 12.5 mm)

Access to the six adjustment screws of the props is provided at the front surface of the panel. Each sandwich panel has a tongue-and-groove joint, six props and eight vibration insulated attachment points. As well as previous generations panels to the floor 6, ceiling and side surfaces the sandwich panels are adjacent through a layer of elastic tape 4. After installation and adjustment, the panels are closed with a finishing layer of plasterboard 5 (12,5 mm).

The proposed design of ZIPS-Z4 on a flat wall has 50 мм thickness and additional sound reduction index ΔR_w = 13 dB. When leveling the surface with an average irregularity of 30 mm, the additional sound insulation index ΔR_w increases by 2 dB (ΔR_w = 15 dB) due to increase of the actual distance between the sound-reflecting layer and the base wall surface. Thus, due to the alignment of the finishing surface in the room, there is an increase in the acoustic result of the ZIPS-Z4 system.

8. SUMMARY

Frameless systems of additional sound insulation of ZIPS for 20 years of its application have shown themselves to be a reliable, ready-to-use solution for a construction site. The factory production of the product with the fastening points, supports and adjusting elements included in the panel design made it possible to significantly reduce the loss of additional sound insulation due to poor installation. The presence in the system of the finishing layer of plasterboard sheets allows you to apply any kind of decorative finishes without restrictions. The reliable system of sandwich panels allows you to mount attachments on a finished surface with a load of up to 60 kg per linear meter of construction.

In general, the additional sound reduction index ΔR_w = 13 dB at a thickness of 55 mm on the wall with the initial sound insulation of airborne noise R_w = 50 dB is one of the most significant achievements for the known systems for additional sound insulation.

By this time (2019), more than 2,500,000 m2 of ZIPS panels in many countries have been produced and installed for our customers. Studies to improve the acoustic efficiency of the additional sound insulation system ZIPS will be still continued.

REFERENCES

1. Boganik AG. Study of sound insulation of enclosing structures with flexible frameless multilayer covering. Ph.D. Diss., NIISF; Moscow, Russia: 2007.
2. Brekhovskikh LM. Waves in layered media. 2nd Edition. Academic Press INC; New York, USA: 1980.
3. Skudrzyk E. Simple and complex vibratory systems. Penn State University Press; Pennsylvania State, USA: 1968.