Design of Loudspeaker Systems for Reverberant Rooms

Wolfgang Teuber[1], Ernst-Joachim Völker[1]
[1] *Institut für Akustik und Bauphysik, D61440 Oberursel, Germany, Email: info@iab-oberursel.de*
www.iab-oberursel.de
V00414

Introduction

Sound systems designed for high quality music reproduction and good speech intelligibility often reach technical limits when operated in acoustically unfavorable, mostly very reverberant rooms. The question is raised how these limits can be shifted by choosing other loudspeakers, their electroacoustic data, loudspeaker sites, alignment and equalization. Audibly problematic rooms are not only such with long reverberation times but also halls with several reflecting walls and strong single or multiple reflections. Acoustic improvements in the room should be checked first but not feasible in many rooms, for example historical buildings, concert halls and churches. However, high speech intelligibility is required, for example at lectures in concert halls. Within former DAGA- or AES conventions the authors reported about the "Giesshaus" in Kassel, a former factory and now conference centre of the university, [1] a cylindrical building with convex ceiling, loudspeaker systems in churches, [2, 3] Weimarhalle with concert hall and conference centre [4] as well as a just completed sound system at the University of the German Federal Armed Forces in Hamburg. [5] Criteria for aimed sound irradiation with maximally high direct sound, leaving out reflecting room boundaries and careful tuning of the system are determining criteria for good speech intelligibility and the mostly required high-quality music reproduction.

Design of Sound Systems

Room-acoustical parameters such as reverberation time, level decrease at distance duplication (measurements in 1/3 octave bands) and ETC plots are required for system design.

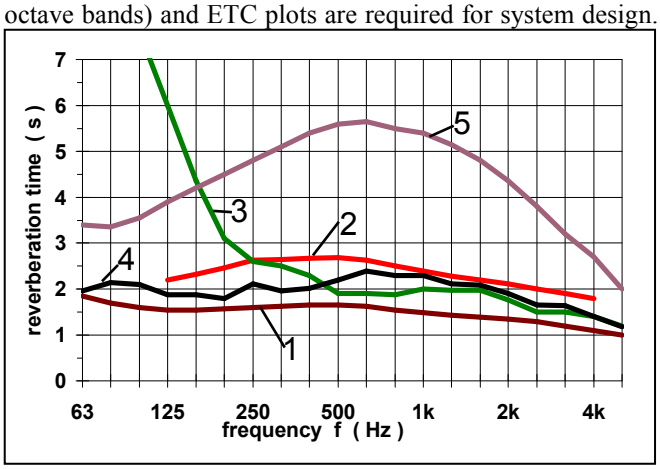

Figure 1: Reverberation times of different halls and churches
1: Weimarhalle, predicted 1997, 1200 seats, V=8800 m³, absorption on back wall; occupied, RT=1.5s
2: Weimarhalle, calculated in May 1999, without absorption on back wall, with chairs, unoccupied, RT=2.3s
3: Giesshaus Kassel, RT=2.6s
4; Hamburg University of the Army, RT=2.1s
5: St, Michael church Hamburg, unoccupied, V=34000m³, RT=4.7s

Fig. 1 shows measured and calculated reverberation times of different rooms. If room modifications occur during the planning stage this must have consequences for the sound system. This can be seen from the difference between curve 1 at the beginning and curve 2, calculated at short time before completion of the Weimarhalle. Here the sound absorbing back wall was modified with reflecting wood panels. Therefor orientations of loudspeakers and coverage areas had to be altered.

Precision alignment of loudspeaker coverage

The basic idea in this case is to cover the listener's area only and to leave blank all other surfaces. From equation (1)

$$L_p = L_w + 10*\lg\left(\frac{Q}{4*\pi*r^2}\right) + 10*\lg\left(\frac{4*T}{0{,}16*V}\right) \quad (1)$$

Lp = sound pressure level (dB) Lw = sound power level (dB)
Q = directivity factor r = distance (m)
T = reverberation time (s) V = room size (m³)

criteria for the direct sound can be derived:

- Short distance between loudspeaker and listener
- High directivity factor Q

The frequency dependent directivity can not be represented by Q as a single value sufficiently. Different horizontal and vertical polar responses are further needed. More precise results come from computer calculation of the sound field. These tools help to find out best radiation patterns and to select suitable loudspeakers afterwards. To damp the diffuse field line arrays are often preferred, e.g. in churches.

It is also important to switch off loudspeaker zones from room fields without public. In case of missing occupation these speakers would irradiate against unpholstered chairs or walls and therefore increase the diffuse sound. Essential improvements mean adaptation of the loudspeaker system with switching off unneeded zones. Through setups which are selected even by the untrained user, required loudspeaker zones are selected and unoccupied muted, such as side areas or galleries in churches, adjacent rooms etc. In the Kassel Giesshaus four selectable horn systems are under the center of the dome. They are switched by a matrix according to seating.

Time delay units

Acoustical crosstalk between coverage areas exists such as front systems having influences on rear zones. In the area in-between sound parts with different time delays arrive. Investigations [6] showed reduced speech intelligibility through that result. Time delayed operation of the rear speakers means raised intelligibility.

Adaptation of frequency response

A flat response might be desirable for music, but in case of speech low frequencies or a range with increased reverberation times are stimulated (also see Fig. 1 curve 4).

In order to improve speech intelligibility restrictions in the frequency response have to be made and adaptation of the PA-system to the room requires precise equalization. Every loudspeaker circuit needs its individual 1/3 octave equalizer.

Sound back to the microphone

Diffuse sound as well as direct sound from loudspeakers nearby can get back to the microphone and will reduce feedback-stability and cause more reverberation. In reverberant rooms it's essential to find loudspeaker positions, directivity patterns and alignments to reduce the acoustical influence back to the microphone. In this case small speakers with radiation angles, e.g. 90°/60° directed to the listeners show better results than ceiling speakers which cover a wide area including microphone positions. The same disadvantage occurs when the sound of horn systems is reflected back by walls. Further improvements to better feedback stability can be achieved by notch filters, carefully tuned, noise gates and automatic mixers which reduce the number of open microphones to a given value. Fig. 2 shows

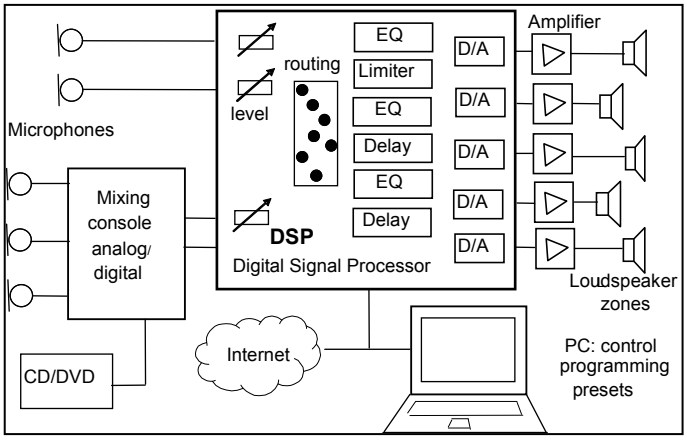

Figure 2: simplified block diagram of a PA system: filtering, delays and signal routing realized by a Digital Signal Processor.

the block diagram. All components in the signal chain are realized by a DSP. It includes automatic mixer, routing, 1/3octave equalizer, notches, delays and levelling. Several setups of different room conditions are stored in the same way as various frequency curves for speech and music are available.

Simulation of Sound Field and Speech Intelligibility

Computer software for sound field simulation in rooms are good tools to predict speech intelligibility and to find out the best coverage and loudspeaker orientation. Calculated STI values indicate areas of poor coverage or multiple reflections. In the Weimarhalle loudspeaker orientations were optimized by such STI calculations and proposals worked out to avoid reflections from the back wall. Similar to STI values the computer program calculates ETC diagrams (Energy Time Curve) and room relevant parameters such as clarity, Deutlichkeit according to Thiele [7] etc.

System Adjustments

In acoustically difficult or reverberant rooms precise and careful adjustments are indispensable. Only with those the quality and capability of the system can be produced. Measurements are carried out according to the following procedures:

- Inspection of correct routing of loudspeaker zones, polarity check of individual loudspeaker systems.
- Measurement of loudspeaker alignment both vertical and horizontal angle of horns and also sound pressure spectrum at listener positions.
- Settings of equalizers (linear response of sound level or roll off for f>5 kHz) and dB(A) level in the front or main speaker zone. Influences from the room must be taken into account. Longer reverberation times can be a reason for the necessity of low frequency suppression or damping some 1/3 octave bands, in particular if the system is mostly used for speech.
- The measured dB(A) level is a reference value for other zones. In these areas the volume should not exceed this level.
- In rear loudspeaker zones the level from the front zone is measured first, then frequency response and level are set. One should not set the volume (dB(A)) higher than the above mentioned reference level.
- Setting of time delay units by measuring impulse-reflectograms (ETC – curves). Direct sound from the rear delayed loudspeaker should arrive some milliseconds later than the direct sound from main speakers.
- Listening tests with music and recorded / live speech. Sound quality and speech intelligibility are judged by several persons at various positions in the room. Often equalizer settings were changed as a result of bad sound impressions. Restrictions in frequency response due to reverberation time can cause worse sound quality (telephone voice). Here a compromise must be found between wide frequency response or better speech intelligibility.
- Suppression of feedback frequencies, tuning notch filters. Feedback depends on microphone positions and therefore the success remains limited. Automatic filters can at least in part compensate this disadvantage.

Again listening tests must be carried out in the occupied room. Sometimes adjustments were modified after first events. By use of DSP units one can save all settings, compare these with new setups or find better alternatives.

References

[1] Teuber, W., Voelker, E.J.: Altes Giesshaus Kassel – raumakustische Verbesserung und Lautsprecheranlage, DAGA 1986
[2] Voelker, E.J., Teuber, W.: Some acoustical aspects for sound system design in churches, 96th AES Conv. Amsterdam (1994), Preprint 3866
[3] Voelker, E.J., Teuber,: Media technique and sound systems in churches CFA/DAGA 2004 Strasbourg
[4] Voelker, E.J., Teuber,: Quality criteria for the sound system in the new Weimar Hall, AES Convention Munic (2002)
[5] Voelker, E.J., Teuber,: Multimediale Audio- und Videotechnik für die Eingangshalle Roter Platz der Helmut-Schmidt-Universität in Hamburg
[6] Völker, E.J., Teuber, W.: lmproved speech intelligibility by use of time delays in sound systems, 84. AES Conv. Paris 1988, Preprint 2562
[7] Thiele, R.: Richtungsverteilung und Zeitfolge der Schallrückwürfe in Sälen, Acoustica 3 (1953) p 291