Efficient Transient Run-up Simulations for the Investigation of Acoustically Relevant Vibrations of Turbocharger Structures with Floating-Ring Bearings

Lukas Bernhauser[1], Lorenz Steinwender[1], Roland Neumayer[1],
Markus Schörgenhumer[2], Manfred Nader[2] und Hans Irschik[3]

[1] *BMW Group, 4400 Steyr, E-Mail: lukas.bernhauser@bmw.com*
[2] *Linz Center of Mechatronics GmbH, 4040 Linz, E-Mail: markus.schoergenhumer@lcm.at*
[3] *Johannes Kepler University, 4040 Linz, E-Mail: hans.irschik@jku.at*

Introduction

In recent years, the development of combustion engines has been dominated by the trend of „downsizing“, i.e. the reduction of quantity and/or volumetric size of the cylinders. In order to increase the specific power of such new engines, while simultaneously reducing their emissions, turbocharging - today often realized as multi-stage systems - has become indispensable. Over the past decades, the customers' expectations regarding vibration comfort and engine acoustics have risen significantly. As engine noise has been continuously reduced, the noise emitted by turbocharging systems has recently become a focal point of the engine sound design.

One of such noises originating from turbochargers is often referred to as „constant tone“ or „subsynchronous whining“. It originates from self-excited rotor vibrations due to the highly non-linear stiffness characteristics of the journal bearings in modern turbochargers (TC) and can be acoustically perceived in the driver's cabin. Due to their wide use in practice, the so-called floating ring bearings are here of particular interest. This bearing concept involves a freely rotating journal bearing bushing with separate oil squeeze films between the bushing and both the shaft and the center housing.

In the literature, the underlying rotordynamic effect of the constant tone is often called „oil whirl“ [1][4][5][6][7]. The constant tone results from a self-excited vibration in the inner oil film. It may be significant in amplitude (higher than the vibration due to imbalance) and depends on various parameters, such as rotor dimensions, bearing geometry and tribological properties. For most applications, such vibrations can only be restrained, not fully eliminated. The simulative prediction of the constant tone in full floating ring bearings is therefore crucial for the design of turbocharging systems. It is the main focus of the presented research work.

Subsynchronous oil whirls may be investigated as acoustical effect in the vehicle, as vibrations at the engine or at the turbocharger itself. For a near-component test, TC run-up experiments on a hot gas test rig are conducted. Vibrations of such an experiment measured at the TC housing are depicted in Figure 1. Whereas the imbalance trace is increasing its tonal frequency linearly with rotor speed (synchronous vibrations), the non-linear TC bearing characteristics (full floating ring bearings) introduce additional subsynchronous vibrations associated with rotor mode shapes such as the conical or cylindrical subsynchronous modes [6]. The inner cylindrical oil whirl gives rise to the audible constant tone in the driver's cabin.

A validated simulation can be useful to investigate, which geometrical or tribological parameters are crucial in order to optimize the system towards smaller amplitudes and a later onset time/speed of the constant tone. A simulative parameter study allows for an efficient acoustical engineering in the early design phase of engines.

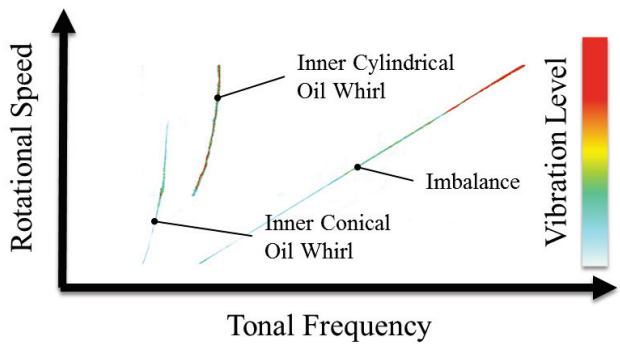

Figure 1: Turbocharger vibration level at bearing housing measured at the BMW hot gas test rig.

Model Description and Simulation Environment

An efficient simulation-based analysis of high-speed rotordynamics with hydrodynamic bearings imposes several challenges with regards to both the numerical formulation as well as the solver and simulation environment. Firstly, the rotordynamics of the mechanical system, including gyroscopic effects, need to be captured accurately. Secondly, both an accurate and efficient bearing model is required to account for the highly non-linear characteristics of hydrodynamic bearings, in the most general case, floating ring bearings. Finally, the simulation environment should provide a robust implicit solver and a parameterized model setup to enable parameter studies and optimization.

In the present work we utilize the simulation tool HOTINT [2], which provides a versatile framework for the efficient numerical modelling and simulation of general flexible multibody systems, and furthermore, includes functionality for visualization, post-processing and optimization. HOTINT is available online (www.hotint.org) both as maintained freeware release and open source version.

As sketched in Figure 2 a general multibody model in HOTINT consists of

- a set of rigid and flexible bodies, which are connected or in mutual contact by some kind of constraints,
- loads, which act on the bodies,
- sensors for the measurement of any system variable,
- IO blocks, which take a sensor value or mathematical expression as input and can dynamically modify the other components of the multibody system.

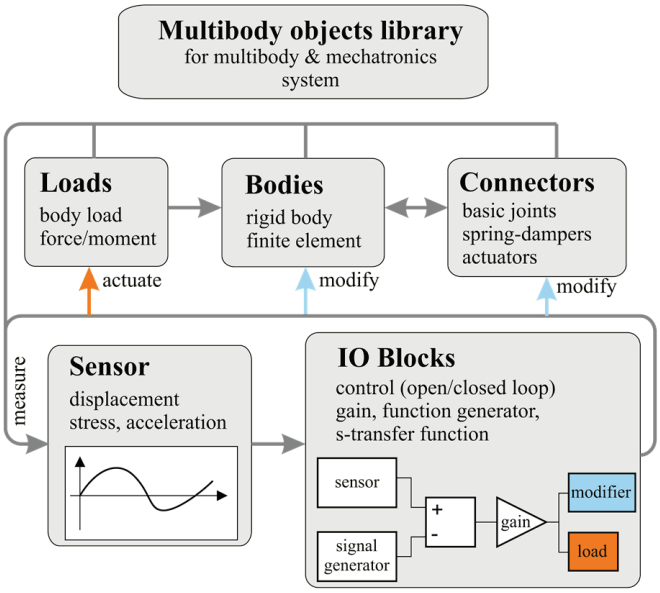

Figure 2: HOTINT object library.

Within that framework, a complex rotor can be modeled efficiently by specialized beam elements supporting large rotations about one axis and rigid disk elements, which may take into account gyroscopic effects. The discretization is one-dimensional along the axis of the rotor resulting in a relatively small overall number of degrees of freedom, and hence, efficient simulation models. Imbalance and gravitational forces are accounted for by (time dependent) loads, which act on both beam and disk elements. Damping may be included both in the form of internal material damping (Rayleigh damping model) as well as external damping forces. Finally, the hydrodynamic bearings are implemented as special constraints, which rely on a numerical solution of the Reynolds equation (see, e.g., [3]),

$$\frac{1}{R_a^{\,2}}\frac{\partial}{\partial\varphi}\left(h^3\frac{\partial p}{\partial\varphi}\right)+h^3\frac{\partial^2 p}{\partial x^2}=6\eta\left(\frac{U}{R_a}\frac{\partial h}{\partial\varphi}+2\frac{\partial h}{\partial t}\right) \qquad (1)$$

with $U=\omega_i R_i+\omega_a R_a$

based on a finite difference method. Here, R_i and R_a denote the inner and outer radius of the bearing, ω_i and ω_a the respective angular velocities, $h(\varphi,x)$ the oil film thickness, η the dynamic viscosity of the oil, and $p(\varphi,x)$ the hydrodynamic pressure field in dependence of the circumferential coordinate φ and the axial direction of the bearing x .

In every time step, the numerical solution of the pressure field is obtained, then the associated velocity field, and finally, both normal as well as shear stresses in the oil film can be computed. By integration, the forces and moments acting on rotor, floating ring bearing and housing are determined. The floating ring is treated as rigid body in the multibody system, subject to the forces and moments exerted by both the inner and the outer oil film.

A sketch of the model setup with floating ring bearings is given in Figure 3. The present investigations are based on a symmetric setup with a customized Laval rotor including two identical full floating ring bearings. For a detailed description of the system and model parameters see “Simulation 2” in [6].

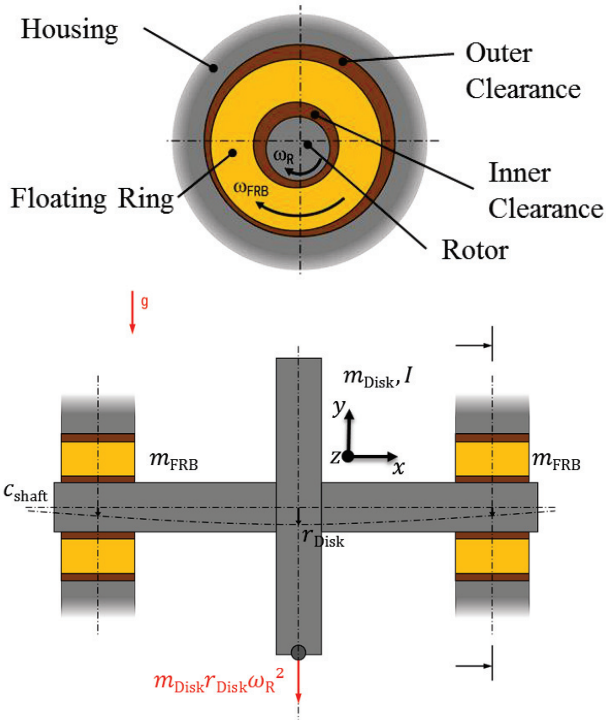

Figure 3: Model of a customized Laval rotor in floating ring bearings.

Within the discussed multibody dynamics framework in HOTINT, any dynamic analysis of the non-linear rotor-bearing system can be performed efficiently. The typical computational effort for the simulation of a rotor run-up within 10 seconds of physical time amounts to roughly 3 hours CPU time with the numerical solution of Equation (1), which is still sufficient to reasonably conduct parameter studies. In the present work we particularly focus on run-up simulations with a kinematically imposed angular velocity of the rotor.

Post-processing is based on sensors, which are defined within the model setup and provide access to any kinematic or dynamic quantities, such as displacements, velocities, bearing eccentricities, or forces.

Parameter Study and Simulation Results

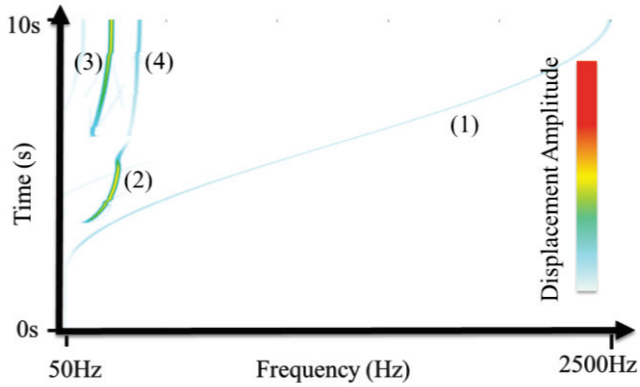

Figure 4: Spectrogram of the disk displacement in y-direction during a run-up.

In the run-up simulations of the parameter study, analogous to the run-up experiment mentioned in the introduction (cf. again Figure 1), four main vibration frequencies can be seen in the spectrogram of the displacements of the central disk, Figure 4. The synchronous trace due to the system imbalance (1) rises monotonically from 50Hz to 2500Hz with the rotor speed. The three subsynchronous vibrations are the inner oil whirl (IOW) originating from the inner oil film (2), the outer oil whirl (OOW) from the outer oil film (3) and the rotor-bearing system's eigenfrequency at around 300Hz (4) [6].

The parameters are varied within the limits of system stability depending on the original configuration as adopted from [6]. Outside the stable parameter range one can find instabilities originating from the inner and/or the outer oil film, including the so-called total instability [7] in both films.

Amplitudes and durations of IOW and OOW highly depend on the bearing stiffnesses and damping of the system, which significantly change if clearances, bearing lengths or viscosities are altered.

A stiffer oil film (i.e., lower clearances, higher bearing lengths or higher oil viscosity) leads to a less pronounced oil whirl originating from this oil film. An increase of the inner clearance, for example, causes higher amplitudes and duration of the IOW at the expense of the amplitudes and duration of the OOW. The change in the characteristics of the disk displacement in y-direction with respect to the increasing inner clearance is depicted in Figure 5, the opposing trend of the IOW and OOW can be seen in Figure 6.

A variation of the outer oil film properties clearly changes the damping behavior of the floating ring bearing with respect to the IOW. For instance, an increase of the outer bearing length leads to larger amplitudes and increased duration of the IOW.

In comparison to above findings, a change of the oil viscosity due to temperature differences of only a few degrees centigrade affects the subsynchronous vibrations of the system in a similar order of magnitude as geometrical parameters. Since such temperature variations lie within the operating range of common turbochargers, it will be necessary to study the effect of varying oil viscosities in future research.

As a result of both an increasing shaft and inner bearing radius such that the clearances remain constant, the circumferential surface velocities rise due to the larger geometry of the shaft and an increase of the floating ring's angular velocity. Considering Equation (1), once again, a stiffer behavior of the inner oil film would be expected. Note that both U and $\partial h / \partial \varphi$ increase for the inner oil film at a given film thickness h. The simulation results agree with above considerations, showing a less pronounced IOW and larger amplitudes and durations of the OOW.

An overview of the results of all variations regarding durations and amplitudes of IOW and OOW as well as the parameter stability regions can be found in Table 1.

Summary of the Results

One finds that a change in the bearing stiffness of one oil film mainly affects amplitudes and duration of the oil whirl originating from this oil film. A reduced damping in one film imposes larger oil whirl amplitudes in the other film.

A larger shaft radius decreases the IOW in its amplitude at the expense of the OOW.

In order to reduce the IOW amplitude, the most crucial parameters are therefore the clearances, bearing lengths and viscosities. Most investigated parameters affect the IOW in an opposite trend than the OOW.

Table 1: Trend of disk displacement amplitudes in y-direction and durations of inner and outer oil whirl with respect to different parameter sets. The sensitivity to a change of a parameter is indicated by one (small) or two (large) arrows or a circle (no change); arrows pointing upwards refer to an increase, downwards a decrease of the respective quantity. The column on the right contains the corresponding stability regions relative to the original parameter values.

Parameter	Amp. IOW	Dur. IOW	Amp. OOW	Dur. OOW	Stab.
Inner Clearance ↑	↑↑	↑↑	↓↓	↓↓	-30% 11.2%
Inner Bearing Length ↑	↓	↓	o	o	-35%/ +40%
Inner Viscosity ↑	o	↓	↑	↑	+60%/ +100%
Outer Clearance ↑	↓↓	↓↓	↑↑	↑↑	-9.6%/ +15%
Outer Bearing Length ↑	↑↑	↑↑	↓↓	↓↓	-35%/ +40%
Outer Viscosity ↑	↑↑	↑↑	↓↓	↓↓	-40%/ +100%
Shaft Radius ↑	↓	↓↓	↑	↑↑	-50%/ +10%

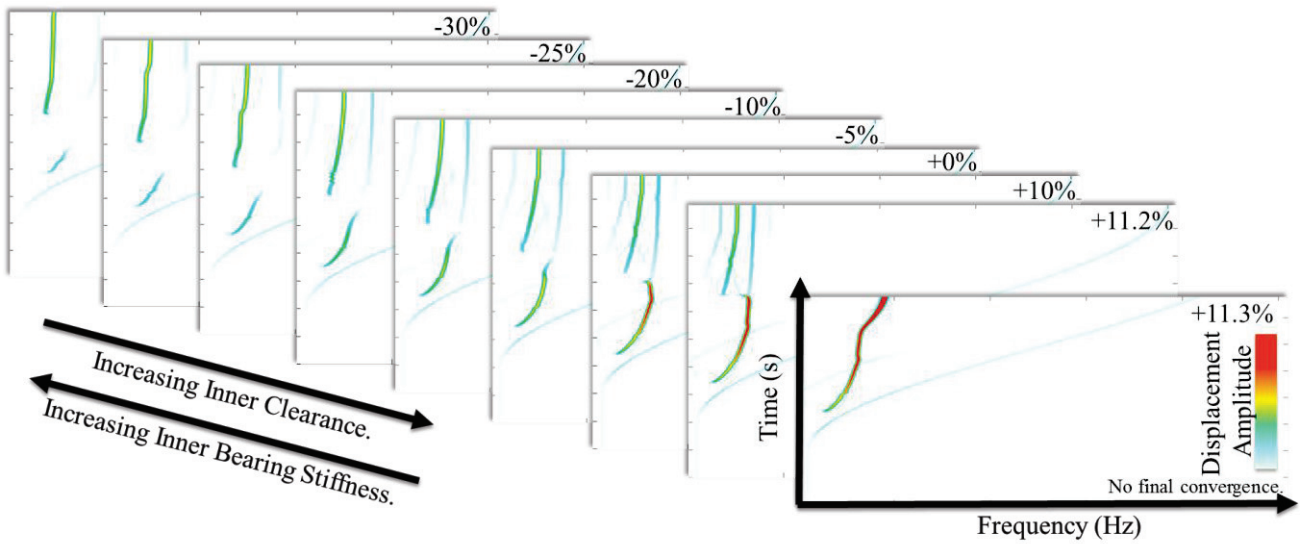

Figure 5: Variation of Inner Clearance.

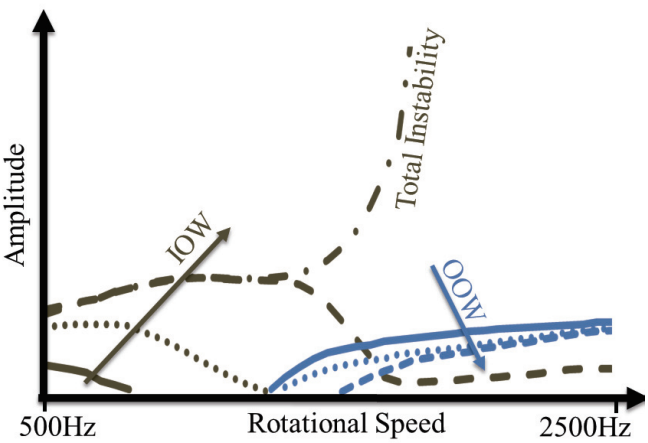

Figure 6: Amplitudes of IOW (brown) and OOW (blue) with respect to a change of the inner clearance. The durations as well as amplitudes of IOW and OOW are behaving oppositely. IOW amplitudes increase monotonically with rising inner clearance whereas OOW decreases. A total instability appears at large inner clearances.
Solid lines: -25% inner clearance, dotted: +0% inner clearance, dashed: +11.2% inner clearance, dash-dotted: +11.3% inner clearance.

Outlook

The next step of the studies will be to set up comprehensive turbocharger simulation models and validate them with measurements on the BMW turbocharger hot gas test rig. For a deeper understanding of subsynchronous vibrations and their implications, shaft and bearing motion measurements will accompany those run-up measurements.

Using these simulation models, detailed parameter studies shall be conducted with focus on displacement and acceleration amplitudes, frequencies and onset times (speeds) of subsynchronous vibrations. The trends will be compared to the results of the present study.

Particularly, the detection of crucial parameters regarding the inner cylindrical oil whirl (constant tone) and the confirmation of the opposing trend of inner and outer oil whirls are important and of significant interest.

The results will help to predict the acoustic behavior of a turbocharging system in its early design phase. Consequently, the simulation model will facilitate the integration of such systems into future BMW Diesel engines.

Literature

[1] Boyaci, A., et.al. Stability and bifurcation phenomena of Laval/Jeffcott rotors in semi-floating ring bearings. Nonlinear Dynamics (2015), 1535-1561

[2] Gerstmayr, J., et al. HOTINT – A Script Language Based Framework for the Simulation of Multibody Dynamics Systems. Proceedings of the ASME 2013 International Design Engineering Technical Conferences & Computers and Information in Engineering Conference (2013)

[3] Lang, O.R., et.al. Gleitlager. Springer-Verlag Berlin-Heidelberg-New York, 2013

[4] Nguyen-Schäfer, H. Rotordynamics of Automotive Turbochargers. Springer-Verlag, Berlin-Heidelberg, 2013

[5] Nguyen-Schäfer, H. Aero and Vibroacoustics of Automotive Turbochargers. Springer-Verlag, Berlin-Heidelberg, 2013

[6] Schweizer, B. Oil whirl, oil whip and whirl/whip synchronization occurring in rotor systems with full-floating ring bearings. Nonlinear Dynamics (2009), 509-532

[7] Schweizer, B. Total instability of turbocharger rotors-Physical explanation of the dynamic failure of rotors with full-floating ring bearings. Journal of Sound and Vibration (2009), 156–190.