PROCEEDINGS of the
23rd International Congress on Acoustics

9 to 13 September 2019 in Aachen, Germany

BEM Simulation of tube acoustics using thin elemens

Wolfgang KREUZER(1), Veronika WEBER(2)

(1)ÖAW, Acoustics Research Institute, Austria, wolfgang.kreuzer@oeaw.ac.at
(2)ÖAW, Acoustics Research Institute, Austria, vero_weber@gmx.at

Abstract

The acoustic of hollow tubes and pipes is of interest in many research areas, e.g. noise control, simulation of musical instruments or when modelling the human vocal tract. As an alternative to the "classical" tube models that assume plane wave propagation inside the tube, the boundary element method offers a flexible alternative, where different materials and different shapes of the tubes (e.g. curved tubes) can be easily simulated. In this paper we present a BEM model of a hollow tube using thin elements. We use this model to calculate the resonance frequencies and the sound radiation of a so called Klangröhre or Boomwhacker, which is a musical toy for children tuned to the note C4. The simulation results are then compared with measured resonance frequencies from the same Boomwhacker.

Keywords: Sound, Tube, BEM

1 INTRODUCTION

The simulation of sound wave propagation and acoustic radiation in connection with (half) open tubes and pipes has a long tradition in acoustic engineering. Among the many numerical methods used in acoustics the boundary element method (BEM) plays an important role because its flexibility with respect to geometry, material parameters and radiation condition, especially at infinity. In our talk we present a BEM model for a tube where the wall thickness is assumed to be infinitely small. This has the advantage that no coupling between interior and exterior domain of the tube and no special boundary conditions at the tube ends are necessary. The tube is assumed to be made of hard plastic and vibrations of the material are neglected. This plastic tube is 63 cm long tube with radius r = 1.75 cm and when hit against an object it produces the musical note C. The BEM is used to calculate the sound radiation for frequencies between 100 Hz and 1500 Hz. To verify the BEM calculations the resonance frequencies are compared with measurements. In the conclusion we briefly discuss possible numerical problems in connection with the model.

2 SIMULATION OF TUBES

2.1 Classical tube models

In music theory, the most common used approach for simulating tubes and pipes (e.g. for flutes [1] or to simulate the human vocal tract [2]), is to assume that the sound wave inside the tube can be represented as the sum of two traveling (plane) waves, one from right to left, and the other from left to right, reducing the 3D wave propagation problem to a one dimensional system. The assumption of a traveling plane wave is valid as long as the cross section of the tube is small enough compared to the wavelength of the traveling wave. Additionally, most of these models assume that the tube walls are rigid and that there are no losses do viscosity or heat conduction (cf. [2]). The models are mostly used in the frequency domain to calculate resonance frequencies.

A second drawback of the 1D tube approach is modeling the sound radiation at the tube ends. The sound radiation is sometimes considered by including an additional tube segment with larger cross sections at the ends, by considering a radiation model cf. [3, 4]), or by introducing correction factors dependent on the radius of the tube to correct the fundamental frequency of the tube (cf. [5]).

2.2 BEM model

Compared to the 1D-tube models full 3D-BEM simulations have the advantage, that different materials can be used, the shape does not need to be a straight tube, and modeling radiation at the tube ends can be easily done. But like in the case of a finite element analysis standard BEM simulations suffer from stability problems if the wall width is very small. One way to model a tube in 3D could be to close both ends of the tube, and then

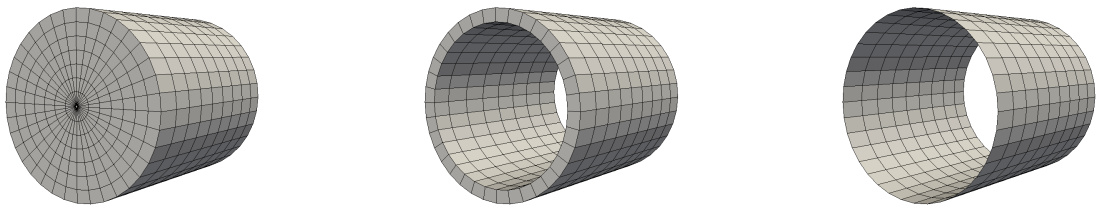

a) b) c)

Figure 1. Different possibilities to model a tube with BEM

couple an interior and exterior problem using appropriate boundary conditions (see Figure 1a). In the different approach one could model the tube with standard 3D elements like in Figure 1b). But in that case stability problems are expected and probably very small elements will have to be used. A third alternative is to use thin elements comparable to shell or plate elements for FEM (see Figure 1c). In such a formulation the whole problem can be seen as an exterior problem, and as in case b) the radiation at the ends poses no problem at all.

2.3 Thin BEM elements

In the literature thin BEM elements have already been used for simulating e.g. cracks, loundspeakers, or glass noise barriers. In this work we use the BEM formulation from [6]. Starting from the direct BIE formulation

$$c(\mathbf{x})u(\mathbf{x}) - \int_\Gamma H(\mathbf{x},\mathbf{y})u(\mathbf{y})d\Gamma_y + \int_\Gamma G(\mathbf{x},\mathbf{y})v(\mathbf{y})d\Gamma_y = 0 \tag{1}$$

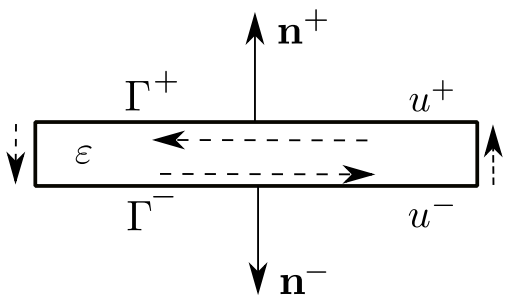

Figure 2. Scheme for a thin BEM element. For the final element $\varepsilon \to 0$.

where $c(\mathbf{x}) = 0, \frac{1}{2}, 1$ if $\mathbf{x}$ is inside the scatter Ω, on a smooth part of the boundary $\Gamma = \delta\Omega$ of the structure, and at a point outside the structure ($\mathbf{x} \in \Omega_e$), respectively, the formulation for the thin elements are given by:

$$u(\mathbf{x}) - \int_\Gamma H(\mathbf{x},\mathbf{y})\Delta u(\mathbf{y})d\Gamma_y + \int_\Gamma G(\mathbf{x},\mathbf{y})\Delta v(\mathbf{y})d\Gamma_y = 0, \mathbf{x} \in \Omega_e\,, \tag{2}$$

$$\frac{u^+(\mathbf{x}) + u^-(\mathbf{x})}{2} - \int_\Gamma H(\mathbf{x},\mathbf{y})\Delta u(\mathbf{y})d\Gamma_y + \int_\Gamma G(\mathbf{x},\mathbf{y})\Delta v(\mathbf{y})d\Gamma_y = 0, \mathbf{x} \in \Gamma\,, \tag{3}$$

$$\frac{v^+(\mathbf{x}) + v^-(\mathbf{x})}{2} - \int_\Gamma E(\mathbf{x},\mathbf{y})\Delta u(\mathbf{y})d\Gamma_y + \int_\Gamma H'(\mathbf{x},\mathbf{y})\Delta v(\mathbf{y})d\Gamma_y = 0, \mathbf{x} \in \Gamma\,. \tag{4}$$

In Eqs. (2) to (4) $u(\mathbf{x}), u^+(\mathbf{x})$, $u^-(\mathbf{x})$, and $\Delta u(\mathbf{x})$ denote the velocity potential at an exterior point $\mathbf{x}$, the velocity potental at one side of the infinitely thin element, the velocity potential on the second side, and the difference of the potentials $\Delta u = u^+ + u^-$, respectively. $v(\mathbf{x})$ is the particle velocity, $G(\mathbf{x},\mathbf{y})$ is the free field Green's function for the Helmholtz equation, and H, H', and E denote the double layer, the adjungated double layer and the hypersingular operators:

$$G(\mathbf{x},\mathbf{y}) = \frac{e^{\mathrm{i}kr}}{4\pi r},\ r = ||\mathbf{x}-\mathbf{y}||, \tag{5}$$

$$H(\mathbf{x},\mathbf{y}) = \frac{\partial}{\partial \mathbf{n}_y} G(\mathbf{x},\mathbf{y}), \tag{6}$$

$$H'(\mathbf{x},\mathbf{y}) = \frac{\partial}{\partial \mathbf{n}_x} G(\mathbf{x},\mathbf{y}), \tag{7}$$

$$E(\mathbf{x},\mathbf{y}) = \frac{\partial^2}{\partial \mathbf{n}_x \partial \mathbf{n}_y} G(\mathbf{x},\mathbf{y}), \tag{8}$$

where $\frac{\partial}{\partial \mathbf{n}_x}$ denotes the derivative with respect to $\mathbf{x}$ in the direction of the normal vector at $\mathbf{x}$, $k = \frac{2\pi f}{c}$ denotes the wavenumber, and $\mathrm{i}^2 = -1$.

The 'positive' side is defined by the direction of the normal vector (see also Figure 2).

3 NUMERICAL EXPERIMENTS

To test the BEM formulation the sound radiation and resonance frequencies of a straight plastic tube (Klangröhre, Boomwhacker) with radius 1.75 cm and a length of 63 cm was investigated. The dimensions of the tube were chosen to match a tube producing the note C4 with a fundamental frequency of about 262 Hz (an additional measurement of the real tube resulted in a fundamental frequency of 264 Hz).

3.1 BEM simulation

For the BEM simulation we used collocation with constant elements. The cylindrical surface of the tube was subdivided into $16 \cdot 63$ elements quadrilateral elements, thus along the length of the tube the element length was 1 cm. The tube was assumed to be sound hard, and as excitation force a velocity boundary condition at two elements 3 cm from one tube ending was chosen (see the bright elements in Figure 3). Additional to the surface mesh evaluation grids where placed along the tube ends and parallel to the tube ends in 3 cm distance for determining the resonance frequencies. All simulations were done between 100 and 1500 Hz in steps of 1 Hz. As the stiffness matrix was relatively small a direct solver from the LAPACK library was used.

3.2 Simulation results

In Figure 4 the radiation pattern at the first resonance frequency and the sound pressure inside the tube at 1296 Hz are given. In Figure 4b the typical nodes and antinodes for tubes can be observed quite clearly.

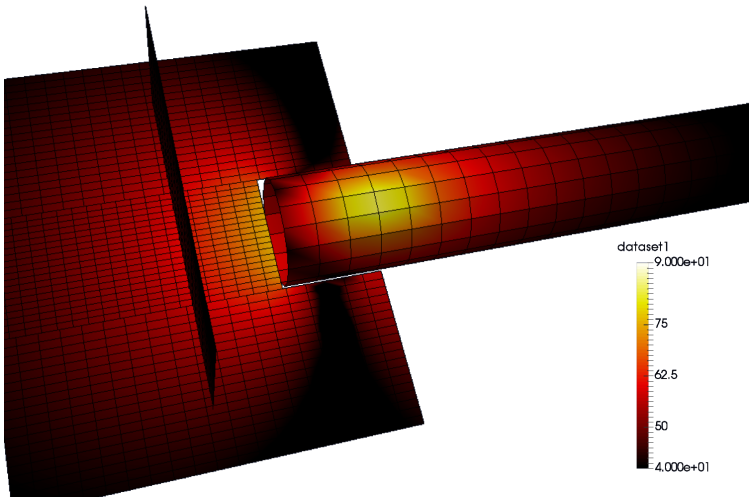

Figure 3. BEM mesh and the absolute value of the calculated sound pressure at a frequency of 100Hz. The grid around the tube is used for the evaluation of the sound pressure and its radiation at the tube ends. The two bright elements on the tube mark the elements where the velocity boundary condition was applied.

In Figure 5 the measured resonance frequencies can be compared with the calculated results. As can be seen by the data, the measured and calculated frequencies agree up to some Hertz. One possible reason for the small difference may lie in the assumption of the tube to be sound hard. If one looks for example at Figure 5b) the typical theoretical harmonic structure of the resonances for a rigid tube is slightly more pronounced.

4 CONCLUSIONS

Using thin elements in combination with the boundary element method offers an attractive alternative for solving wave propagation problems in connection with thin walled tubes. Compared to some other methods, the BEM is relatively flexible with respect to shape and materials, and it has the advantage that no special consideration has to be made to model the sound radiation at the tube ends.

However, it has to be mentioned that the method has some possible drawbacks. In general, it is recommended to use at least 6 elements per wavelength (cf. [7]). In case of the current tube simulation the size of the meshes used had to be smaller than suggested by the above rule of thumb to achieve robust resonance frequencies. Heuristically this can be motivated by the fact that the position of the antinodes (i.e. the low amplitude regions in Figure 4b)), are very important for the radiation and the resonance frequencies, so the meshsize should be chosen in a way, that these zero crossings can be resolved accurately, especially in the case of constant elements.

A second drawback is the BIE-part including the hypersingular operator. Especially at low frequencies and with small grid the condition number of the system becomes quite large, which is a problem, even if the linear system is solved by a direct solver, because the resonance frequencies can be shifted a few Hertz which is unacceptable at low frequencies. To that respect the tube would be a nice benchmark for algortithms that adapt the representation of the solution to the frequency at hand.

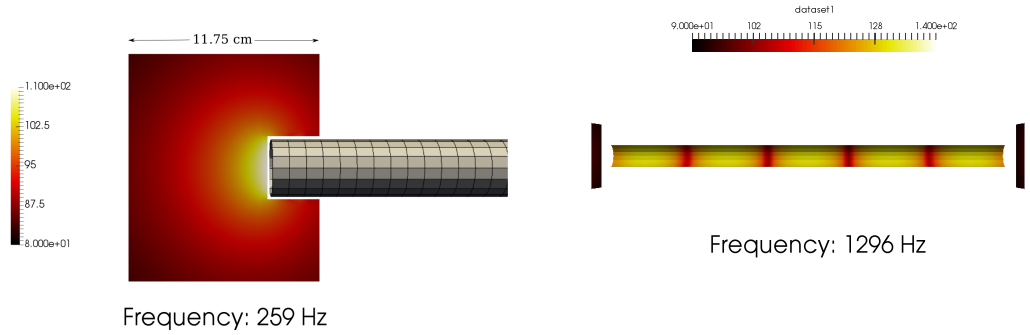

a) b)

Figure 4. a) Absolute sound pressure at the evaluation grid at the first resonance frequency 259 Hz. b) Absolute sound pressure inside the tube at a frequency of 1296 Hz.

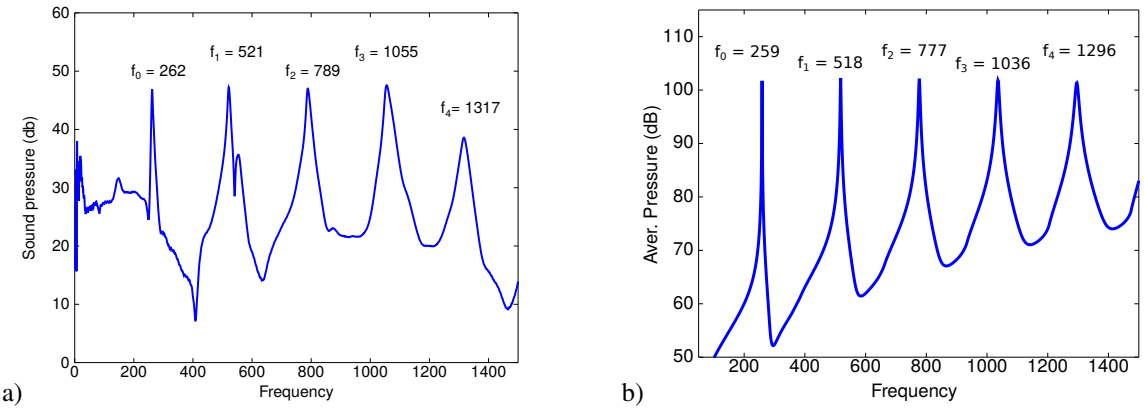

a) b)

Figure 5. Averaged a) measured and b) calculated sound pressures at the evaluation grid.

REFERENCES

[1] Fletcher, N. H.; Rossing, T. D. The physics of musical instruments. Springer, Ne York Berlin Heidelberg London Paris Tokyo Hong Kong Barcelona Budapest 1991.

[2] Wakita, H. Direct estimation of the vocal tract shape by inverse filtering of acoustic speech waveforms. IEEE Trans. Audio Electroacoust, Vol 21 (5), 1973, pp 417–427.

[3] Levine, H.; J. Schwinger, J. On the Radiation of Sound from and Unflanged Circular Pipe. Phys. Rev., Vol. 73, 1948, pp 383–406.

[4] Dalmont, J. -P.; Nederveen, C. J.; Jolly, N. Radiation Impedance of Tubes with different Flanges: Numerical and experimental investigations. J. Sound Vibr., Vol 224(3), 2001, pp 505–534.

[5] Ruiz, M. J. Boomwhackers and End-Pipe Corrections. Pys. Teach., Vol. 52, 2014, pp 73–75.

[6] Chen, Z.-S.; Hofstetter, G.; Mang H. A. A Symmetric Galerkin Formulation of the Boundary Element Method for Acoustic Radiation and Scattering. J Comput. Acoust, Vol 5(2), 1997, pp 219–241.

[7] Marburg, S. Six boundary elements per wavelength. Is that enough? J. Comput. Acoust. Vol. 10, 2002, pp 25–51.