PROCEEDINGS of the
23rd International Congress on Acoustics

9 to 13 September 2019 in Aachen, Germany

The Collation and Use of Data from Continuous Remote Monitoring Systems for the Control of Sound Emissions from a Large Industrial Noise Source

Timothy G PROCTER[1]; Stephen LYONS[2]

[1] Griffith School of Environment, Griffith University, Australia

[2] Umwelt (Australia) Pty Limited, Australia

ABSTRACT

Using traditional closed-loop control theory, this paper shows how the analysis of the sound emissions from the constantly changing environs of a large open-cut mine identified the source of a time lag in the implementation of appropriate control strategies. As a result, a new control strategy based on SMART technology has been developed to reduce the error signal time lag and help improve the control of noise emanating from the mine. Key elements of the new control system discussed in this paper include: the collation, analysis and reporting of the continuous real-time noise and meteorological monitoring data; confirmation of the source's contribution in a multi-source environment; and identification of high-risk operational activities associated with the noise source. The SMART technology presents this information in a format that: enhances the mining supervisor's perception of the current environment; improves the comprehension of the data; reduces the uncertainty associated with identifying the mine's contribution to the acoustic environment; and enables potential future actions and outcomes to be identified. This paper demonstrates that enhancing a user's perception and awareness of the situation enables pre-emptive rather than reactive decision-making that results in reduced noise impacts and improved productivity.

Keywords: Sound Emissions, Control, Industrial, SMART technology

1. INTRODUCTION

SMART[3] technology, described as the next industrial revolution, is widely used across many sectors with intuitive graphic user interfaces integrating commercial data with end-user experiences. To name but a few of the well-integrated applications, SMART technology allows for the review of weather, access to healthcare, online and in-store shopping, organising travel, route selection based on traffic conditions and the management of household energy use and generation. As such, SMART technology applications are emerging in numerous sectors, from healthcare and education to manufacturing and industry (1,2,3).

SMART technologies are based on the collection, collation and interpretation of data. Sensors of one form or another gather data in real time for immediate use or store the data for further analysis. If appropriate algorithms or artificial intelligence have not been developed to automate the analysis and interpretation of the data, the collated data is delivered for user interpretation. A social commentary in the UK Saga Magazine (4) reported that the long-term success of SMART products and services would depend on how well the technology satisfied the user's desire for practical solutions that made tangible differences. While SMART technology is highly developed for individual users, the application of the technology for the industrial sector is not as advanced.

[1] tim.procter@griffithuni.edu.au
[2] slyons@umwelt.com.au

[3] Originally an acronym for computer hard drive "Self-Monitoring, Analysis and Reporting Technology", SMART is a description for inanimate objects that can talk to the user to guide behaviour, is associated with network connectivity and often implies artificial intelligence.

However, this is not to say that there isn't a wealth of data available for the collection, collation and interpretation in many industrial arenas.

In particular, the mining industry in Australia has deployed a myriad of sensors to collect data for a diverse range of applications. These sensors track changes in groundwater depth and production rates, and record data on highwall stability, weather conditions and mining machine diagnostics. As technology advances, the collection of the data from the systems deployed is steadily being automated, enabling real time reporting from individual sensors and the collation and aggregation of the data to produce information that is easier to comprehend and promote understanding (5).

Over the last 18 years the coal mining industry in New South Wales, Australia, has installed over 60 continuous noise monitoring units to record and report on the acoustic environment in the region local to each monitoring unit. The continuous noise monitoring units have been installed either individually or as part of continuous noise monitoring networks. The continuous noise monitors report in several different proprietary formats using a range of different media and access protocols and can generate in excess of 330 Mbytes of data each per day. However, the different brand units have one primary metric of interest in common: the intrusive LAeq,15minute sound pressure level from the source-of-interest.

The original continuous noise monitors were designed and installed at a time when environmental noise standards and legislation were structured around principles of after-the-fact noise reporting rather than noise management (6). Installation of continuous noise monitoring units by mining operations has facilitated the development and implementation of a range of pro-active noise management techniques. The developments initiated by the mining operations are now reflected in development consents[4] that require the mining operations to implement comprehensive noise management systems to ensure compliance with noise immission limits specified in respective consents. The prescriptive requirements of the development consents require the noise management systems to use a combination of predictive meteorological forecasting, real-time meteorological data and real-time noise monitoring data to guide the mining operations. The mining operations also use predictive noise modelling to identify potential operational constraints and mine plan design alternatives.

Operationally, the day-to-day management of an open-cut mine struggles to assimilate and respond, in real-time, to the data from the continuous noise monitors. The management of the mine is the responsibility of the Mining Supervisor and is dictated by statutory rules and laws that govern the health and safety of the people working in and around the mine. Part of the role of the Mining Supervisor is to manage the noise emitted from the mine in accordance with the requirements of the development consent. To facilitate the management of the noise emitted by the mining operation, the noise management systems need to firstly, present the information in a format that enhances the user's perception of the current environment; secondly, improve the user's comprehension of the data in relation to the stated aim, objective or goal of their role; and finally, enable the user to identify potential future actions and outcomes (7,8,9).

2. Motivation for the Development of a New Noise Management System

Noise modelling indicated there would be a significant increase in the noise levels in a rural community in the Hunter Valley, New South Wales resulting from the approved re-orientation of the open-cut pit of a coal mine between 2015 to 2017. It was predicted the sound pressure level[5] attributed to the mine in the region to the south-east of the re-orientated open-cut pit would gradually increase by 4 to 5 dB. During the re-orientation, the change in the acoustic environment was measured by a continuous noise monitor located 2500m to the south-east of the site. As predicted, the results from the noise monitor for winter evening/night periods in 2015 and 2016 showed an increase in immission level attributed to the mine of 3 dB. Figure 1 shows the variation in the frequency distribution of measured LAeq,15minute sound pressure level attributed to the mine measured during the winter evening/night periods of 2015 to 2016.

---

[4] A formal notice of approval issued by a regulatory authority for the implementation of a specific development proposal described in a development application. A development consent typically includes a detailed list of conditions under which the development can be operated.

[5] Reported as the immission level at the monitoring location under weather conditions that enhance the propagation of the sound from the source to the receiver.

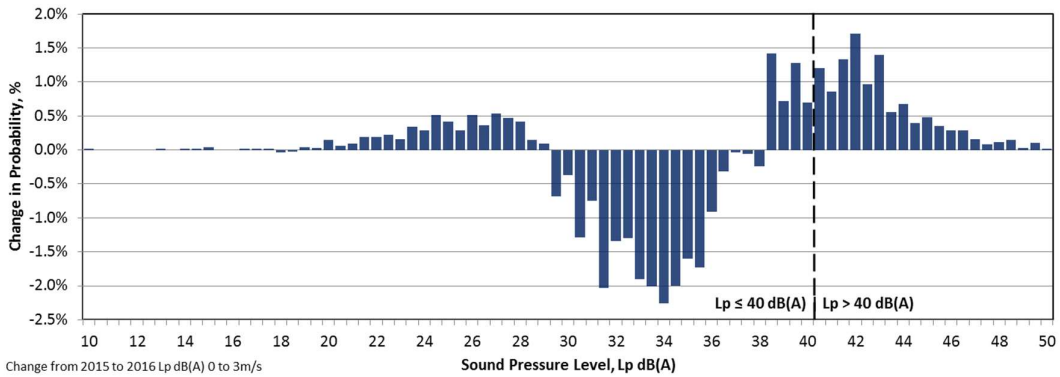

Figure 1 – Variation in the frequency distribution from 2015 to 2016 of the measured winter evening/night time noise immission level attributed to the mine. The raw data has been filtered to minimise the effect of temporal and spatial differences between 2015 and 2016. This enables the impact of changes in the mine plan between 2015 and 2016 to be observed.

The shift in the frequency distribution from the 30 to 38 dB(A) range to greater than 38 dB(A) in Figure 1 can be linked to an increase in the number of machines operating in exposed locations within the mine. Figure 1 also shows an increase in the frequency of noise immission levels less than 30 dB(A) which is attributed to the number and duration of machine shutdowns as the mine's primary form of noise control. The increase in the average measured sound pressure level from winter 2015 to winter 2016 attributable to the re-orientation of the open cut pit was 3 dB. This increase was accompanied by an 85% increase in the noise immission levels above 40 dB(A) at that monitoring location and a 16% increase in the number of complaints. Predictive noise modelling indicated there would be a further 2 dB increase in the noise immission level at the monitoring locations as the mine transitioned through the re-orientation of the open-cut pit.

3. The Response

A phone/tablet-based SMART application was developed as a tool to improve the Mining Supervisor's access to relevant information. To achieve this, the SMART application integrated research into the application of traditional control theory to the control of noise from open-cut mining and research into situation awareness and information visualisation.

In traditional control theory, a closed-loop control system (or feedback control system) uses a 'set point' as a reference value, to characterise the desired output response of a process. The measured difference between the set point and the output response of the process can be due to a change in the set point or due to a disturbance to the system. A well-tuned control system is characterised by its stability, its ability to respond to external disturbances and its reliable and repeatable performance. Representing the noise management system used by the Mining Supervisors as a closed-loop control system enables the response and action of each element of the system to be studied.

Endsley's (10) theory of situation awareness comprises three levels: the perception of the environment, both element and event, with respect to time and space; the comprehension of the meaning of these elements and events as it relates to a specific goal; and the projection or anticipation of what is to occur. Endsley (10) states that situation awareness is distinguished as a state of knowledge as opposed to the process that is used to achieve that state. The research into data visualisation indicated that a user's perception and awareness of a situation is enhanced when they are provided with appropriately visualised data and that increased situation awareness results in decision-making that can be pre-emptive rather than reactive. Understanding the theory of situation awareness and concepts behind effective data visualisation enable the feedback element in the closed-loop control system to be studied in detail.

The goal of the SMART application was to develop a tool incorporating SMART technology and visualisation techniques that enhanced the Mining Supervisor's situation awareness of the noise impacts and associated management requirements for the mine. The investigations into the existing noise management system and the subsequent development of the SMART application to replace the existing feedback element in the closed-loop control system are described below.

4. Development of the Smart Technology Application

4.1 Data Analysis and Noise Control

The collection, collation and use of continuous noise monitoring data from remote noise monitoring units to control noise emitted by the mine is represented as a closed-loop feedback control system in Figure 2.

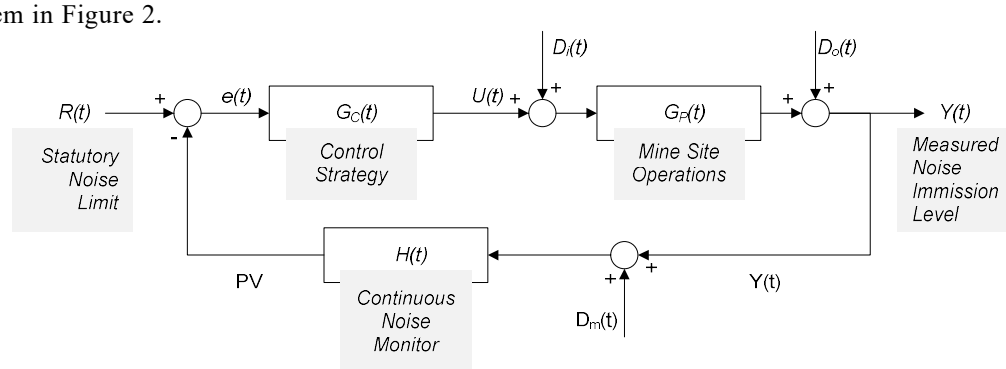

Figure 2 – Block diagram of feedback control system with input, output and measurement disturbance used to represent the control of the noise emitted by an open-cut mining operation

Representing the noise management system as a closed-loop feedback control system modified the approach taken to analysing the collated datasets. The key to this is the definition of each element. Starting with the process $G_P(t)$ the elements in Figure 2 can be described as follows:

- the process $G_P(t)$ is the emission of sound by the mining processes and would include a predefined set of conditions that govern the propagation of the sound to the sensor location. This includes meteorological conditions, ground properties, terrain features (both natural and man-made), the source sound power and directivity associated with the operating/control strategy of the mine, and receiver geometry (11,12).
- $D_o(t)$ is the disturbance that modifies the output signal from the process to produce the noise immission level $Y(t)$. $D_o(t)$ is associated with the spatial variability of the propagation of the sound and would be described as the aleatory uncertainty of the meteorological conditions and ground conditions.
- $Y(t)$ is the noise immission level or sound pressure level from the source-of-interest at the receiving location.
- $D_m(t)$ is the measurement disturbances that hinder the source sound signal identification. Masking effects from other sources is a typical example but $D_m(t)$ may also include limitations associated with the configuration of the sensor array.
- $H(t)$ is the measurement device incorporating one or more continuous noise monitors and PV is the measurement device's representation of $Y(t)$ taking into account $D_m(t)$.
- the error $e(t)$ is the difference between the desired outcome (the set point) $R(t)$ and the measured outcome (or process variable) PV, of the actual output $Y(t)$.
- the control device $G_C(t)$, which can be described as predominantly human, implements a control strategy $U(t)$ based on magnitude and sign of the error $e(t)$. The primary objective of the noise management system represented by Figure 2 is to maintain the noise immission attributable to the mining operation $Y(t)$ at a level that is equal to or less than the noise immission limit $R(t)$ at the location of the sensor array. A secondary objective is to minimise the disruption to the mining operation through the implementation of unnecessary control strategies when $Y(t) < R(t)$. The control strategy $U(t)$ can be represented by the following set of transfer functions:

$$U(t) = \begin{cases} 0 & Y(t) \leq R(t) \\ G_C(t) & Y(t) > R(t) \end{cases} \tag{1}$$

- $D_i(t)$ is the disturbance that modifies the response of the process to the signal/instruction from the control device $U(t)$. $D_i(t)$ is associated with the deviation away from the predefined set of conditions associated with the process $G_P(t)$. This would include the temporal deviation of the meteorological conditions and changes in the operations that deviate from the agreed mining operating/control strategy.

In traditional control theory the overall objective is to minimise the tracking error:

$$e(t) = R(t) - Y(t) \tag{2}$$

Dorf and Bishop (13) show that by manipulating the block diagram in Figure 2[6] the tracking error can be re-written as:

$$e(t) = \frac{1}{1 + G_C(t)G_P(t)}R(t) - \frac{G_P(t)}{1 + G_C(t)G_P(t)}D_i(t) + \frac{G_C(t)G_P(t)}{1 + G_C(t)G_P(t)}D_m(t) \tag{3}$$

The loop gain $L(t)$ of the control system is written as:

$$L(t) = G_C(t)G_P(t) \tag{4}$$

and the sensitivity $S(t)$ of the control system is written as:

$$S(t) = \frac{1}{1 + L(t)} \tag{5}$$

Dorf and Bishop (2011) define a second complementary sensitivity function $C(t)$ as:

$$C(t) = \frac{L(t)}{1 + L(t)} \tag{6}$$

The tracking error can now be written in terms of the system sensitivity, the input disturbance $D_i(t)$ and the measurement disturbance $D_m(t)$:

$$e(t) = S(t)R(t) - S(t)G_P(t)D_i(t) + C(t)D_m(t) \tag{7}$$

When analysing a control system to minimise the tracking error $e(t)$, both $S(t)$ and $C(t)$ need to be small but this cannot happen simultaneously as $S(t) + C(t) = 1$. However, traditional control theory tells us that to reduce the influence of the input disturbance $D_i(t)$ the loop gain $L(t)$ should be large. The resulting function $S(t)G_P(t)$, also written as $G_P(t)/(1 + L(t))$, will be small if $L(t)$ is large thereby reducing the influence of $D_i(t)$. For the loop gain $L(t)$ to be large the control function $G_C(t)$ also needs to be large which can equate to an over-reaction to the error $e(t)$.

To reduce the influence of the measurement disturbance $D_m(t)$ the complementary sensitivity function $C(t)$ needs to be small. To achieve this, the control function $G_C(t)$ needs to be small so that the loop gain $L(t)$ is small which makes the system response sluggish.

This results in a conflict between wanting the control function $G_C(t)$ to be large to reduce the influence of the input disturbance $D_i(t)$ and small to reduce the influence of the measurement disturbance $D_m(t)$. The monitoring results in Figure 1 indicated both situations were present in the existing noise management system. The existing system was sluggish and slow to respond to the error when $Y(t) > R(t)$ and when the system did respond the control function $G_C(t)$ over-reacted.

4.2 Data Collection and Collation

The next step in the investigative process involved the manual collection, collation and analysis of daily monitoring data from primary continuous noise monitors (1500m and 2500m from the active mining area), one supplementary noise monitor (500m from the active mining area) and meteorological data from sensors on three 10-metre towers and from sensors on two supplementary 3-metre towers.

Through manual analysis, a complementary program of fieldwork to validate the monitoring data and predictive noise modelling it was possible to interpret the trends in the relationships between the two primary noise monitors to quantify $G_C(t)$, the measurement device's representation of $Y(t)$ (PV) and the response of the control function $G_C(t)$. The relationship between the two primary noise monitors needed to account for the dynamic nature of the mining operation, the complex acoustic environment at the monitoring locations and the temporal variance of the meteorological conditions; remembering a predefined set of meteorological conditions was considered as part of the process $G_P(t)$ but the temporal deviation of the meteorological conditions away from the predefined conditions would be considered part of the output disturbance modifier $D_o(t)$. The analysis also needed to consider how the tracking error $e(t)$ was being calculated and how it was being communicated to the control function $G_C(t)$.

---

[6] To simplify the analysis, the output disturbances $D_o(t)$ associated with spatial differences in meteorological conditions that enhance or retard the propagation of the sound signal for a predefined set of meteorological conditions have been ignored.

4.3 Data Analysis

Analysis of each element of the closed-loop feedback control system using the collated data discussed above identified several shortcomings in the existing control strategy. This included the reliance on a single noise monitor to quantify, with certainty, the noise immission level $Y(t)$ from the source-of-interest at the receiver location 2500m from the source, uncertainty in determination of atmospheric stability conditions and the relationship between level $Y(t)$ and PV as a result of the function of the measurement device $H(t)$.

The first two items have resulted in modifications to the monitoring equipment. Ongoing research is investigating the use of paired monitors to determine the noise immission level $Y(t)$ and additional temperature sensors have been added to the weather stations to improve the reporting of the output disturbance modifier $D_o(t)$.

The most significant shortcoming of the existing noise management system was identified as the operation of the measurement device $H(t)$ and the communication of the tracking error $e(t)$ to the control function $G_C(t)$. The analysis of the monitoring data found that a time lag in the PV was the primary source of the tracking error $e(t)$ when $Y(t) > R(t)$.

Figure 3 shows a 210-minute sample of the sound pressure level L_P, where $L_P, = Y(t)$, attributed to the mine at the noise monitor located 2500m from the active mining area. The change in the sound pressure level L_P in Figure 3 is attributed to an input disturbance $D_i(t)$ in the meteorological conditions that resulted in enhancement in the propagation of the sound emitted by the machines operating in the mine towards the noise monitor location. The trace of the reported sound pressure level L_P resembles a process reaction response curve with the control system off-line following a disturbance to the process input. In this instance the control system is not off-line but its action, shown in Figure 3(a), is delayed because the control actions are only initiated following a system alarm, the actual form of PV.

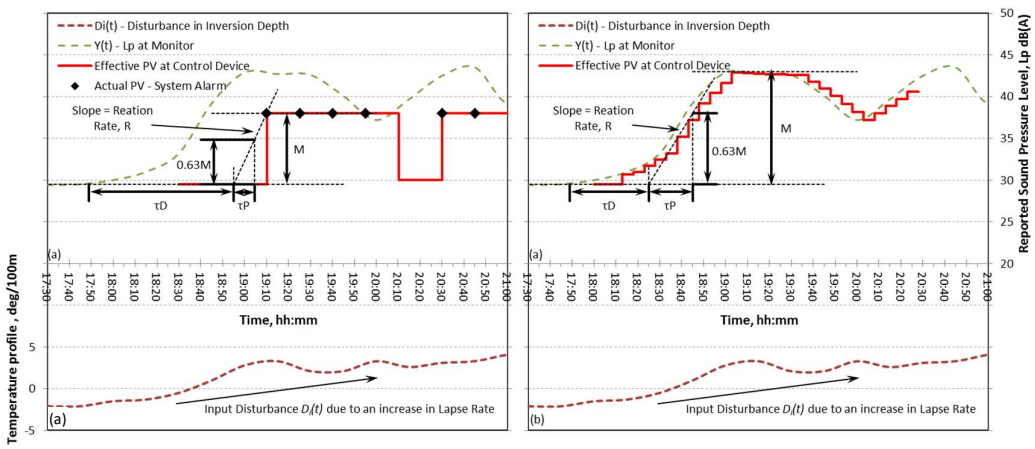

Figure 3 – Analysis of sound pressure level L_P response curve showing the dead-time τ_D of the process reaction, the system time constant τ_P and reaction rate R of L_P following an input disturbance $D_i(t)$ (a) before and (b) after the implementation of the SMART technology,

Figure 3(a) shows that the PV sensor lag, which includes a system dead-time τ_D of 66 minutes has a detrimental impact on the control of the system resulting in the system being sluggish in response to input disturbances. In Figure 3(b) the stem dead-time has been reduced to 36 minutes.

4.4 SMART Technology Applications

A WEB based prototype of the noise management system feed-back loop was developed to automate the collection, collation, analysis and reporting of the monitoring data at 5-minute intervals. The success of the proof-of-concept prototype resulted in the development of a SMART technology application that provided unrestricted access to the information by the Mining Supervisors.

The primary objective of the SMART technology application was to reduce the error signal time lag and facilitate the control of noise emanating from the mine by the Mining Supervisors. Through data aggregation and the tailoring of the data visualisation the SMART technology application has improved the Mining Supervisors' comprehension of the monitoring data and their

understanding/perception of the operation's impact on the acoustic environment.

The effectiveness of the SMART technology application is shown in Figures 4 and 5.

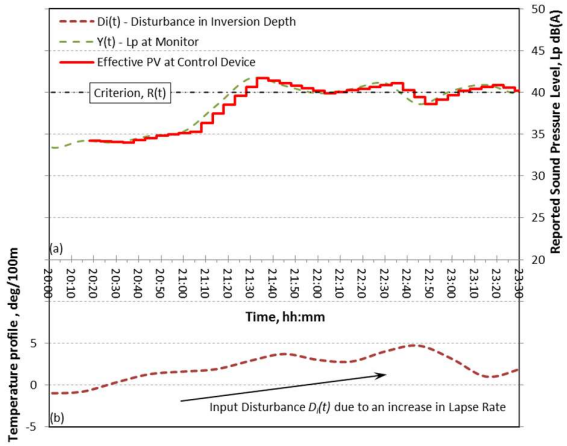

Figure 4 – L_P and PV response curves using an updated PV sensor reporting system following implementation of the SMART technology sensor reporting system. The control objective is: $Y(t) \leq R(t)$ where $R(t) = 40dB(A)$.

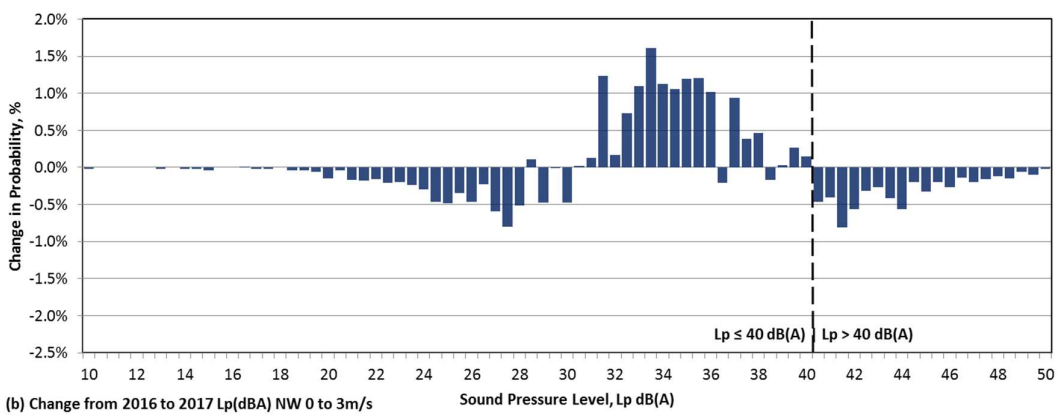

Figure 5 – Variation in the frequency distribution from 2016 to 2017 of the measured winter evening/night period noise immission level attributed to the mine. The raw data has been filtered to minimise the effect of temporal and spatial differences between 2016 and 2017.

Figure 4 shows that the reduction in the PV sensor lag has enabled Mining Supervisors to maintain control of the noise emissions from the mining operation. In comparison to Figure 3(a), Figure 4 shows a reduction in the overshot of the L_P response curve for $R(t) = 40\,dB(A)$ plus improved control of the L_P response curve. The improvement in the L_P response curve can be attributed to the reduction in the PV sensor lag, an increase in the PV sensor updates from 15 minutes to 5 minutes and the improved accessibility to the data through the SMART technology.

Figure 5 shows the variation in the frequency distribution of measured LAeq,15minute sound pressure level attributed to the mine during the winter evening/night periods of 2016 to 2017 following the implementation of the SMART technology application. In comparison to Figure 1, Figure 5 shows a decrease in the frequency of occurrence of noise emission levels over 40 dB(A) and a corresponding increase in the frequency of occurrence of noise emission levels in the 31 to 40 dB(A) range. This shift in the frequency distribution from above 40 dB(A) to below 40 dB(A) is consistent with the established goal for the control system, that $Y(t) \leq R(t)$ where $R(t) = 40\,dB(A)$. Using the SMART technology has also enabled the Mining Supervisors to target high-risk operational activities that contribute to the acoustic environment during noise enhancing meteorological conditions. This is demonstrated in Figure 5 as a decrease in the frequency of noise levels less than 31 dB(A). This is consistent with the second objective of the control system: to minimise the disruption to the mining

operation through the implementation of unnecessary control strategies when $Y(t) < R(t)$. This has been achieved through the implementation of noise control strategies that were designed to reduce the sound output from machines in exposed locations without shutting the machines down.

5. Conclusion

Analysis of the noise management system as a closed-loop feedback control system identified several deficiencies in the existing control strategy. The most significant shortcoming was a time lag in the control system resulting in a sluggish response to high noise immission levels at the receiver location.

The analysis of the existing control strategy lead to the understanding that the installation of continuous noise monitoring networks must be coupled with systems that enhance the situation awareness of the Mining Supervisors. Based on the theory of situation awareness, a SMART technology application was developed to enhance the Mining Supervisors' perception and awareness of the noise immission levels at the receiver location. The SMART technology enabled pre-emptive decision-making that resulted in reduced noise impacts and improved productivity. The change in the average measured sound pressure level at the monitoring location from winter 2016 to winter 2017 attributable to the SMART technology application equated to a gross decrease of 3 dB. This was accompanied by a 40% decrease in the number of hours the noise immission levels were reported above 40 dB(A), a 25% decrease in the number of complaints and a 65% decrease in equipment shutdown resulting in increased productivity.

The use of SMART technology to present meaningful data pertinent to the Mining Supervisors situation awareness has resulted in a measurable improvement in noise impacts.

ACKNOWLEDGEMENTS

The material contained in this paper was developed as part of a research project funded by the Australian Coal Association Research Program (ACARP). The authors would also like to express their appreciation to the industry personnel who contributed to this paper.

REFERENCES

1. Brougham D, Haar J. Smart technology, artificial intelligence, robotics, and algorithms (STARA): employees' perceptions of our future workplace. Journal of Management & Organization. 2018 Mar;24(2):239-57.
2. Dumka A, Sah A. Smart ambulance system using concept of big data and internet of things. In Healthcare Data Analytics and Management 2019 Jan 1 (pp. 155-176). Academic Press.
3. Foroudi P, Gupta S, Sivarajah U, Broderick A. Investigating the effects of smart technology on customer dynamics and customer experience. Computers in Human Behavior. 2018 Mar 1;80:271-82.
4. https://www.saga.co.uk/magazine/technology/home-technology/gadgets/the-rise-of-smart-technology
5. Endsley MR. Situation awareness: operationally necessary and scientifically grounded. Cognition, Technology & Work. 2015 May 1;17(2):163-7.
6. Manvell, D. From noise monitoring to noise management–a better way to deal with noise issues. Proc INTER-NOISE August 2015, San Francisco USA p2473-2484.
7. Endsley MR. Situation awareness misconceptions and misunderstandings. Journal of Cognitive Engineering and Decision Making. 2015 Mar;9(1):4-32.
8. Franklin A, Gantela S, Shifarraw S, Johnson TR, Robinson DJ, King BR, Mehta AM, Maddow CL, Hoot NR, Nguyen V, Rubio A. Dashboard visualizations: Supporting real-time throughput decision-making. Journal of biomedical informatics. 2017 Jul 1;71:211-21.
9. Procter TG, Tomerini D, Brown AL. The Collation and Use of Data from Remote Monitoring Systems. Proc AAS Conference November 2018, Adelaide Australia.
10. Endsley MR. Toward a theory of situation awareness in dynamic systems. Human factors. 1995 Mar;37(1):32-64.
11. Marsh KJ. The CONCAWE model for calculating the propagation of noise from open-air industrial plants. Applied acoustics. 1982 Nov 1;15(6):411-28.
12. Wilson DK, Pettit CL, Ostashev VE, Vecherin SN. Description and quantification of uncertainty in outdoor sound propagation calculations. The Journal of the Acoustical Society of America. 2014 Sep;136(3):1013-28.
13. Dorf RC, Bishop RH. Modern control systems. Pearson; 2011.