PROCEEDINGS of the
23rd International Congress on Acoustics

9 to 13 September 2019 in Aachen, Germany

Measurement of Current Noise and Distortion in Resistors

Youhei MIYAOKA[1]; Minoru Kuribayashi KUROSAWA[2]

[1,2] Tokyo Institute of Technology, Japan

ABSTRACT

In RF telecommunication systems, passive intermodulation has become a significant problem to get stable telecommunication. The passive elements' distortions are actual problems in telecommunication systems due to multi-carrier frequencies. In audio systems, much more frequency spectrum peaks are existed and the spectrum peaks change in time and time. If a resister generates some distortions, the distortions are significant problems in elector-acoustic systems. In the resistor, there is current noise generated by the current flow. Due to the influence of the current noise, the current flow is not always constant, so the fluctuation may cause nonlinear response. Then, it is thought that the resistor has some nonlinearity, and the resistors' nonlinearity causes the signal to be distorted. In this study, we first measured the current noise as a parameter, the resistance and the voltage and wattage. Then we designed measuring circuit of distortion and measured the distortion in the resistor. Finally, we try to find the relation between current noise and distortion.

Keywords: Distortion, Noise, Resistor

1. INTRODUCTION

The sound of listening in the concert hall and the sound from speakers are quite different. The former is "raw" sound, the latter is "electric" sound. The "good" and "bad" sound of the audio system is based on the listening result, and there is only the subjective evaluation. If there is a difference in sound, an objective evaluation based on physical measurement should be possible. In this study, we considered that distortion in analog circuits was one of the causes that affect sound. The distortion expressed by the times of the input signal frequency is called harmonic distortion, and their sum or difference frequency distortion expressed intermodulation. Especially, the intermodulation occur in passive circuit is called PIM (passive intermodulation). PIM is caused by the nonlinearity of a circuit composed of passive elements (1). we focus on the resistor, and consider the method of measurement of distortion.

2. MOTIVATION

2.1 PIM in RF telecommunication system

In the next generation communication, PIM has become a serious problem by receiving the signal near the carrier frequency by improving the sensitivity of the receiver in addition to the broadband, and PIM is attracting high interest now. Given the above, it can be considered that the same phenomenon has occurred in the audible area which dropped the frequency band.

2.2 Nonlinearity of resistors

As mentioned introduction, PIM is caused by the nonlinearity of a circuit composed of passive elements. Therefore, if the signal is distorted by the resistor, the reason of distortion is due to the nonlinearity of the resistors. Resistors are consisted from a variety of materials, carbon solid, thick film, thin film, wirewound, or metal foil. Each resistor has specific characteristics suitable for a variety of applications with different requirements.

[1] miyaoka.y.ab@m.titech.ac.jp
[2] mkur@ee.e.titech.ac.jp

2.3 Noise in resistors

There are two main noises in the resistor, the thermal noise and the current noise. Thermal noise is called Johonson-Nyquist noise; noise voltage of thermal noise V_{themal} is expressed with following equation 1. T is resistor conductor temperature in kelvin, R is the resistors' value in ohms, and k_B is Boltzmann constant.

$$V_{thermal} = \sqrt{4k_B TR} \quad [\mathrm{V_{rms}}/\sqrt{\mathrm{Hz}}] \tag{1}$$

Current noise is excess noise generated when current flows through the resistors. The current noise has features that the noise is directly proportional to the current flowing through the device. Current noise has a frequency characteristic, which PSD (Power Spectral Density) in resistors is reciprocal of the frequency ($1/f$ characteristic). Therefore, the sum of the noise V_{total} from the resistors is represented by the RMS (Root Mean Squares) value, by using current noise PSD $V_{current}$,

$$V_{total}^2 = V_{thermal}^2 + V_{current}^2. \tag{2}$$

While the thermal noise is white noise, the current noise is pink noise. We assume that the current noise is a nonlinear phenomenon and that the magnitude of the current noise represents the magnitude of nonlinearity.

3. CURRENT NOISE MEASUREMENT

3.1 Measuring method

There are standards to measure the current noise such as the IEC60195 (2) or MIL-STD-202-30 (3). The existing standards measure the RMS value in some frequency band settled by a bandpass filter. From the RMS noise value in a certain frequency band, we cannot recognize the noise in current noise or not; the current noise has the $1/f$ characteristic (4). We need frequency distribution of the noise value.

For this study, we chose to follow the method developed by Frank Seifert (5-6). His method is using a full Wheatstone bridge consisted of four DUT (Device Under Test) resistors and an instrumentation amplifier.

Figure 1 is the circuit configuration to measure the current noise using the Wheatstone bridge, that makes it possible to obtain frequency characteristics from the FFT result, and can overcome the problem of IEC and MIL ahead. Here, when the noise voltage generated from each resistor $R_1 \sim R_4$ are $\alpha_1 \sim \alpha_4$, the input voltage to the amplifier $\overline{\Delta V}$ is,

$$\overline{\Delta V} = \sqrt{\frac{\alpha_1^2 + \alpha_2^2 + \alpha_3^2 + \alpha_4^2}{4}}\ . \tag{3}$$

As equation 3, assuming that four resistors have same resistance value and raised comparable noise, it can be seen that output noise is equivalent to the noise generated from one resistor.

The experiment was carried out using 10kΩ resistors with the voltage sources of NiMH AA batteries. The circuit had two-stage amplification; a differential amplification to the first stage, and non-inverting amplification to the second stage. The reason for the two stage is to obtain a flat frequency characteristic in wide range. The amplifiers were chosen in consideration of the source impedance, first stage was AD620 (Analog Devices) and second was AD797 (Analog Devices). One battery had a stable electromotive force of 1.3V. The amplifier output, after passing anti-aliasing filter, was fed into an oscilloscope, which was remotely controlled by a personal computer running on MATLAB® program for automated noise measurements. The antialiasing filter using the experiment was 7th VCVS-Butterworth low pass filter, which cut off frequency was 100kHz. All the circuit were fabricated by considering the wiring pattern so that the noise caused by the loop noise was not generated by using the board design software EAGLE.

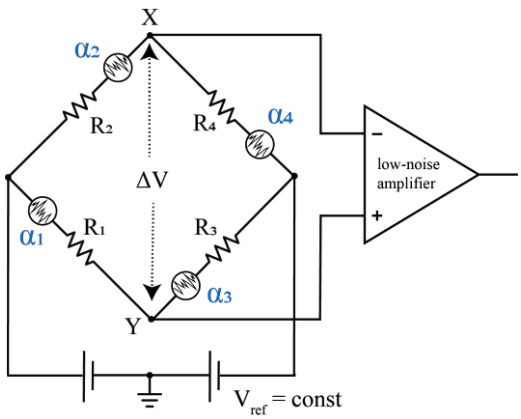

Figure 1 – Circuit configuration

3.2 Differential excitation voltages

The measurement result is shown in Figure 2. The source voltage changed from 2.6V to 20.8V was applied to the Wheatstone bridge composed of 10kΩ carbon film resistors. The unit voltage value was 1.3 V fixed by the electromotive force of one battery. The current noise PSD was reciprocal of the frequency at 1Hz to 100kHz. When the applied voltage was small with 2.6V, it was confirmed that the current noise was reduced at a frequency of 1kHz or more and convergence to the line of thermal noise. From equation 3, the thermal noise output is equivalent to the noise generated from one resistor as well as the current noise output. The value of a 10kΩ resistor thermal noise is calculated as $V_{thermal} \approx 1.29 \times 10^{-8}\ \mathrm{V_{rms}}/\sqrt{\mathrm{Hz}}$ from equation 1. The amplifier noise like input referred voltage noise were small compared to the thermal noise. It is effect of anti-aliasing filter that the PSD was rapidly damped near 100kHz.

The measurement results of various resistors are shown in figure 3; the measurement conditions were fixed at 10kΩ and 10.4V. From the results, large noise was observed in the trimmer and the carbon-based resistor (carbon film and carbon composition), and a small noise was seen in the metal-based resistor (metal oxide and metal film).

Considering the result of carbon film resistors and metal film resistors, we assumed that the nonlinearity is high in the carbon film resistor and the nonlinearity is low in the metal film resistor. Namely, it is hypothesis that the carbon film resistor has large distortion and the metal film resistor has small distortion.

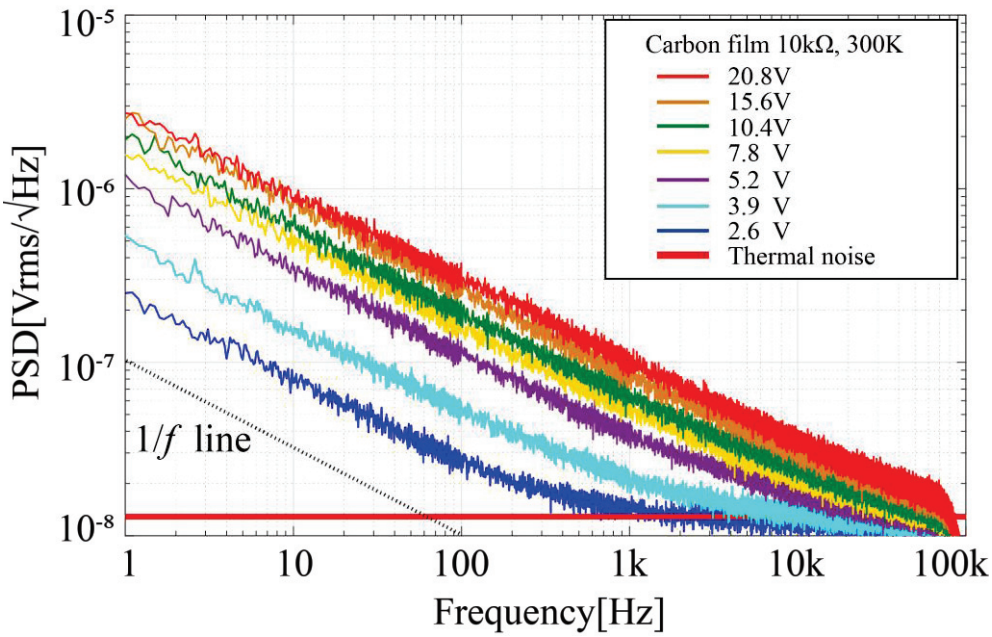

Figure 2 – Carbon film resistor current noise characteristics for different excitation voltages

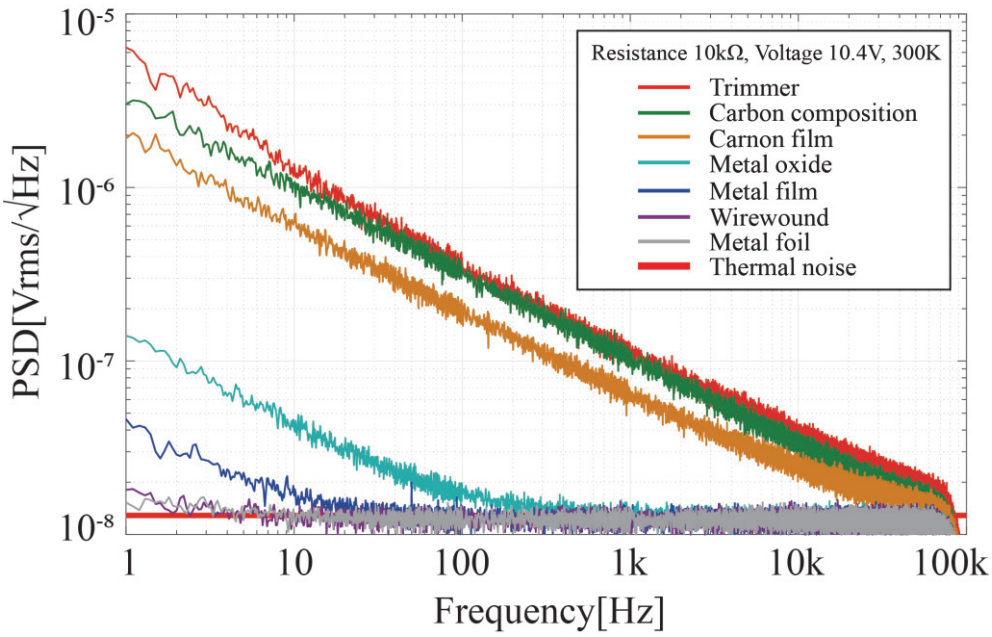

Figure 3 – Current noise of leaded resistors with 10kΩ, 10.4V

4. DISTORTION MEASUREMENT

4.1 Novel distortion measurement method

It has been reported that SMPTE method (7) and CCIF method (8-9) are used as a measurement of the IM for an active element (10). Both methods are measured by using two tone signal into the circuit. The SMPTE method uses a far separated frequency combination such as f_1 = 60Hz, f_2 = 7kHz, and the CCIF method uses a close frequency pair such as f_1 = 14kHz and f_2 = 15kHz. Both SMPTE and CCIF use a bandpass filter to obtain the modulated frequency signal. The bandpass filter has passive elements that we want to evaluate. The usage of the passive elements in the filter circuit makes the discussion to be complicated.

In the same way, there is THD (Total Harmonic Distortion) or THD + N (+Noise) as a method of evaluating harmonic distortion, these evaluating method does not contain only harmonic distortion, and is not suitable for discussion of intermodulation. Even if the terms of the intermodulation distortion are included, as in the case of measuring the current noise in IEC and MIL, these methods are not appropriate because the value came out is a single scalar value. Moreover, the result is not quantitative because the harmonic distortion which can be observed depends on the measurement environment such as the resolution of the measuring instrument. We need to investigate a new measurement circuit to solve these problems.

Figure 4 shows a new circuit configuration to measure the distortion. The measuring circuit uses full Wheatstone bridge consisted of two DUT and two reference resistors; the metal foil resistor (Vishay Z-foil resistors) was chosen for the reference resistors. To the Wheatstone bridge, two types of source signals V_1 and V_2 are applied as shown in Figure 4; V_1 has 1kHz + 1.1kHz mixed sinusoidal signal and V_2 has reversed phase same frequencies signal. Due to the unbalance of the bridge circuit, only the inter modulated signals are sensed at the output X-Y, the amplified by an instrumentation amplifier. It is considered that unbalance of the bridge is caused by the difference of the distortion between the reference and the DUT. The results of the two reference and two DUT are compared with the all four reference.

The circuit output is evaluated by adapting the distortion rate of the CCIF method. The CCIF distortion rate shows the output voltage divided by the total voltage of the original signal by a percentage. In this study, we replace these voltages with FFT output voltages. The distortion rate H_ω is obtained by following equation,

$$H_\omega = \frac{V_\omega}{V_{1\text{kHz}} + V_{1.1\text{kHz}}} \times 100 \quad [\%] \tag{4}$$

where V_ω is the voltage at the focusing frequency ω calculated by FFT output.

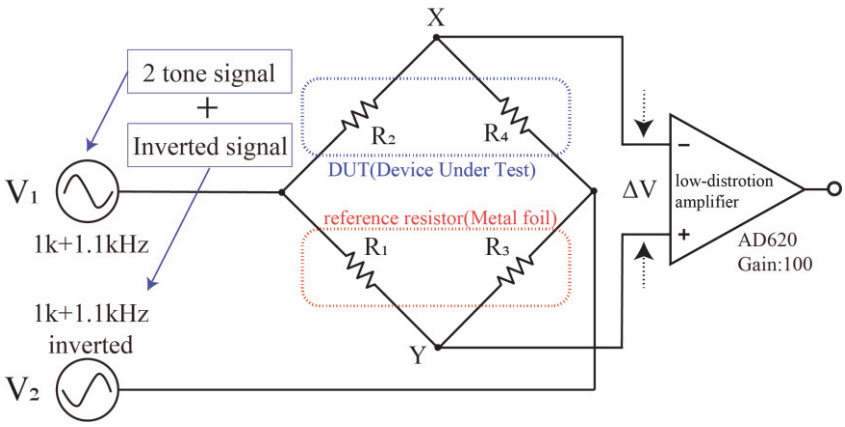

Figure 4 – Novel distortion measurement method

4.2 Result distortion measurement

The distortion rate obtained from the measurement are shown in figures 5 and 6: figure 5 shows that the DUT is carbon film resistors, and figure 6 is metal film resistors. The experiment was carried out using a sinusoidal waves of $10V_{pp}$ and 1kHz + 1.1kHz.

In figures 5 and 6, the red plots indicate the result of all metal foil resistors of the bridge. The blue plots indicate the result of one side metal foil resistors and the other side DUT. In comparison between figure 5 with figure 6, the blue plots of the carbon film resistor are far off from the red plot, whereas the metal film resistor shows close value to the red plot. From those result, it is possible to think that the metal film resistors show the properties close to the metal foil resistors. If the reference metal foil resistor is the ideal resistor without distortion, that is, the metal film resistor can be said to be a resistor with small distortion, and a carbon film resistor is a resistor with large distortion.

The distortion measurement results are consistent with the assumption of the current noise measurement; the distortion is large in the carbon film resistor and the distortion is small in the metal film resistor. Therefore, it can be said that the signal is distorted by the resistor, and the distortion is different depending on the type of resistor. Moreover, there is a possibility that these phenomena are related to non-linearity.

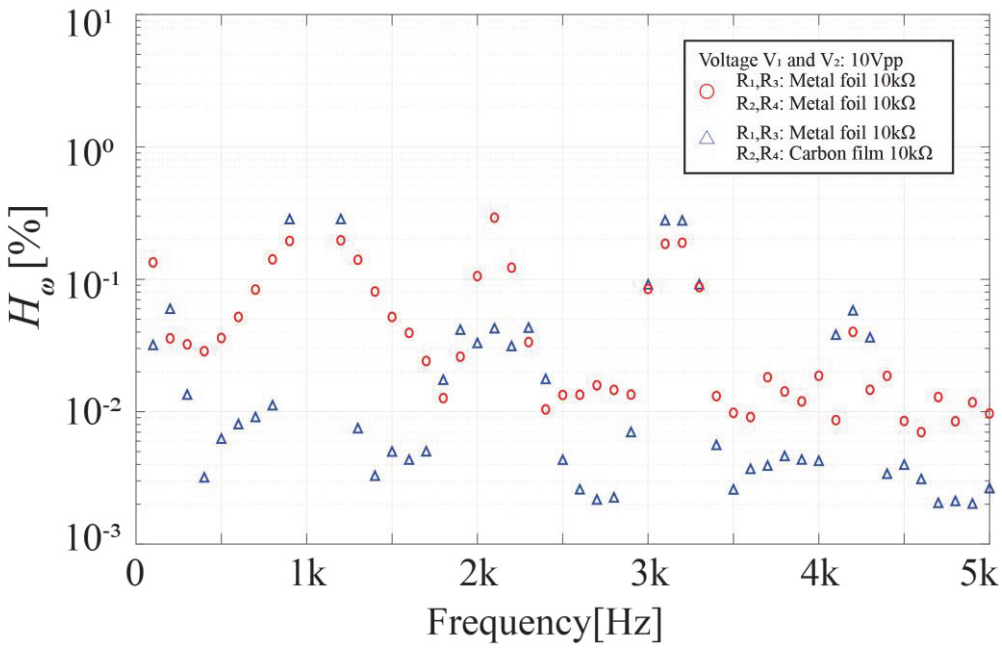

Figure 5 – Distortion rate H_ω in carbon film resistor

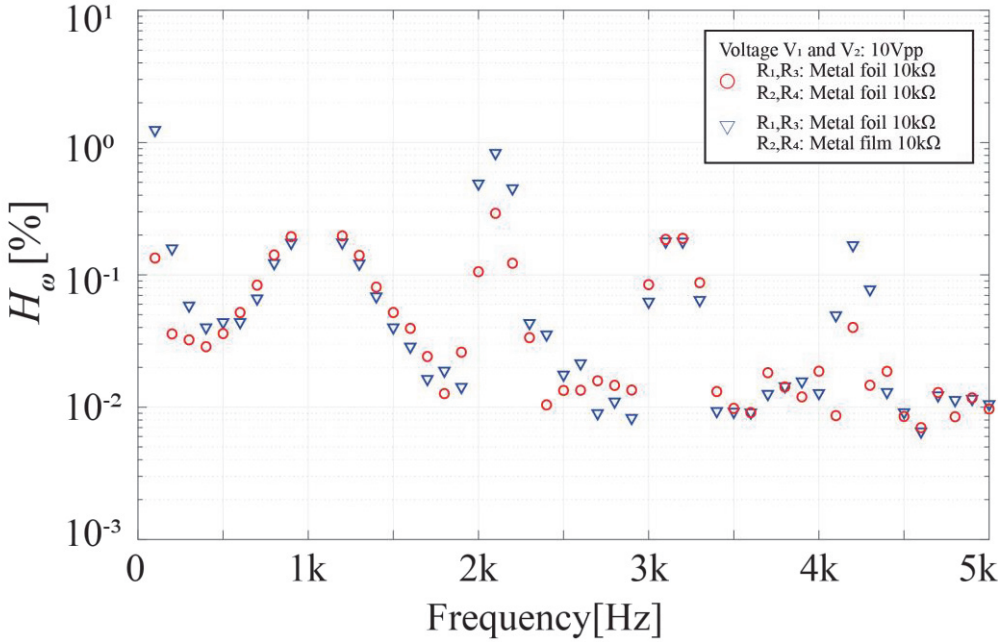

Figure 6 – Distortion rate H_ω in metal film resistor

5. CONCLUSIONS

We investigated the difference of nonlinearity by the type of the resistor, and experimented with a new distortion measurement method. Focusing on the current noise as the nonlinear phenomenon of the resistor, the current noise was measured. Finally, we found the possibility that there is a correlation between the current noise and the distortion. However, the quantitative discussion could not be reached by various factors including the measurement equipment such as the distortion of the signal source. Therefore, it is necessary to continue to examine the circuit in order to conduct a quantitative discussion.

ACKNOWLEDGEMENTS

This work was supported by JKA and its promotion funds from KEIRIN RACE.

REFERENCES

1. Y. Yamamoto and N. Kuga, “Short-circuit transmission line method for PIM evaluation of metallic materials,” IEEE Trans. Electromagn. Compat., vol. 49, no. 3, pp. 682–688, Aug. 2007.
2. IEC, “Method of measurement of current noise generated in fixed resistors,” IEC 60195:2016, International Electrotechnical Commission, Geneva, Switzerland, 2016.
3. MIL, “Department of Defense Test Method Standard: Electronic and Electrical Component Parts,” MIL STD-202H Method 308, Department of Defense, Virginia, USA, 2015.
4. B. LaMacchia and B. Swanson, “Measuring and Evaluating Excess Noise in Resistors,” Audio Engineering Society Convention 145, October 2018.
5. Seifert, F. “Resistor current noise measurements,” Open access LIGO document LIGOT0900200-v1, 2009.
6. Märki, P., “Thick film resistor flicker noise,” https://people.phys.ethz.ch/ pmaerki/, 2013.
7. Hilliard, John K., “Distortion Tests by the Intermodulation Method,” Proceedings of the IRE, December 1941.
8. Maxwell, Donald E., “Comparative Study of Methods for Measuring Nonlinear Distortion in Broadcasting Audio Facilities,” Journal of the Audio Engineering Society, January 1953.
9. Aagard, James S., “An Improved Method for the Measurement of Nonlinear Audio Distortion,” IRE Transaction on Audio, November/December 1958.
10. Cabot, Richard C., “Comparison of Nonlinear Distortion Measurement Methods,” Proceedings of the 11th International AES Conference 1992.